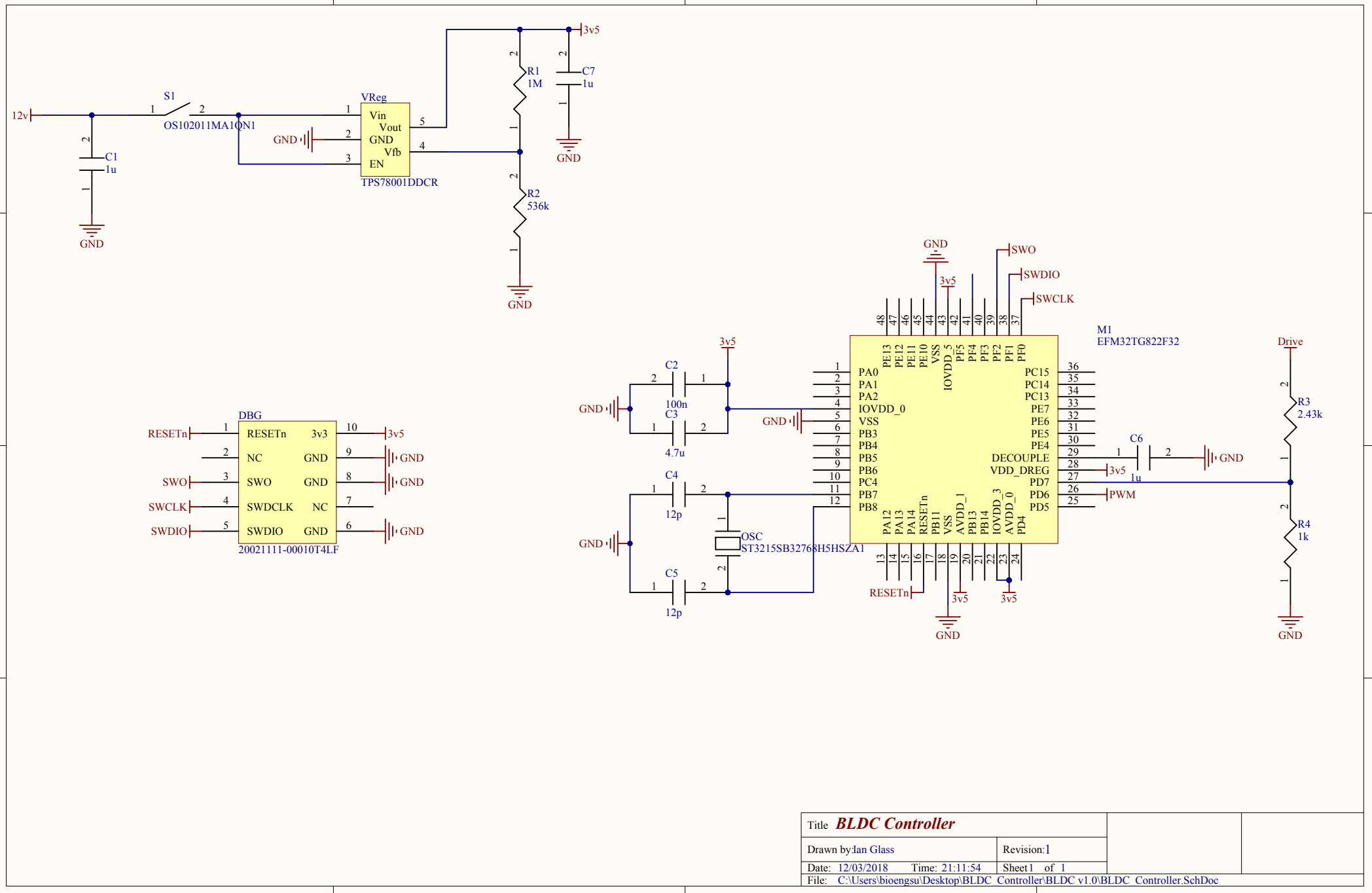

Title	***BLDC Controller***
Drawn by: Ian Glass	Revision: 1
Date: 12/03/2018 Time: 21:11:54	Sheet 1 of 1
File: C:\Users\bioengsu\Desktop\BLDC Controller\BLDC v1.0\BLDC Controller.SchDoc	