Arduino-Based Multi-Sensor Drone System

Overview

This project details the creation of an embedded system mounted on a drone for real-time environmental data collection. It captures temperature, humidity, distance, and color data, transmitting this information wirelessly to a mobile app. The primary goal is to facilitate remote sensing in areas that are challenging to access by humans.

System Architecture

Air Unit (Drone-Mounted System)

- **Microcontroller**: Arduino (ATmega328P)
- **Sensors:** DHT22, Ultrasonic, APDS-9960
- **Communication**: Bluetooth module (HC-06)
- **Feedback**: NeoPixel LED rings

Ground Unit

- A mobile application developed using MIT App Inventor for displaying real-time data.

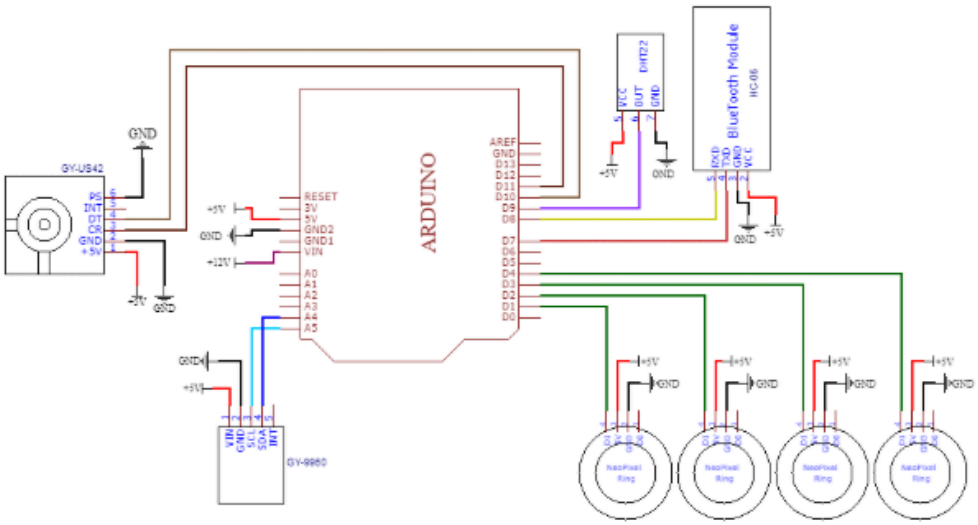

Figure 1: Electrical System Diagram

Hardware & Communication

- The Arduino microcontroller manages all components.
- Sensors are connected via digital pins and the I2C protocol.
- Bluetooth communication utilizes UART.
- LEDs are controlled through digital output.
- The entire system operates on a 5V power supply.

Implementation

- Developed embedded software in Arduino C
- Integrated multiple sensors and communication protocols
- Implemented real-time data acquisition
- Enabled Bluetooth data transmission
- Built mobile app-based monitoring
- Implemented LED feedback system

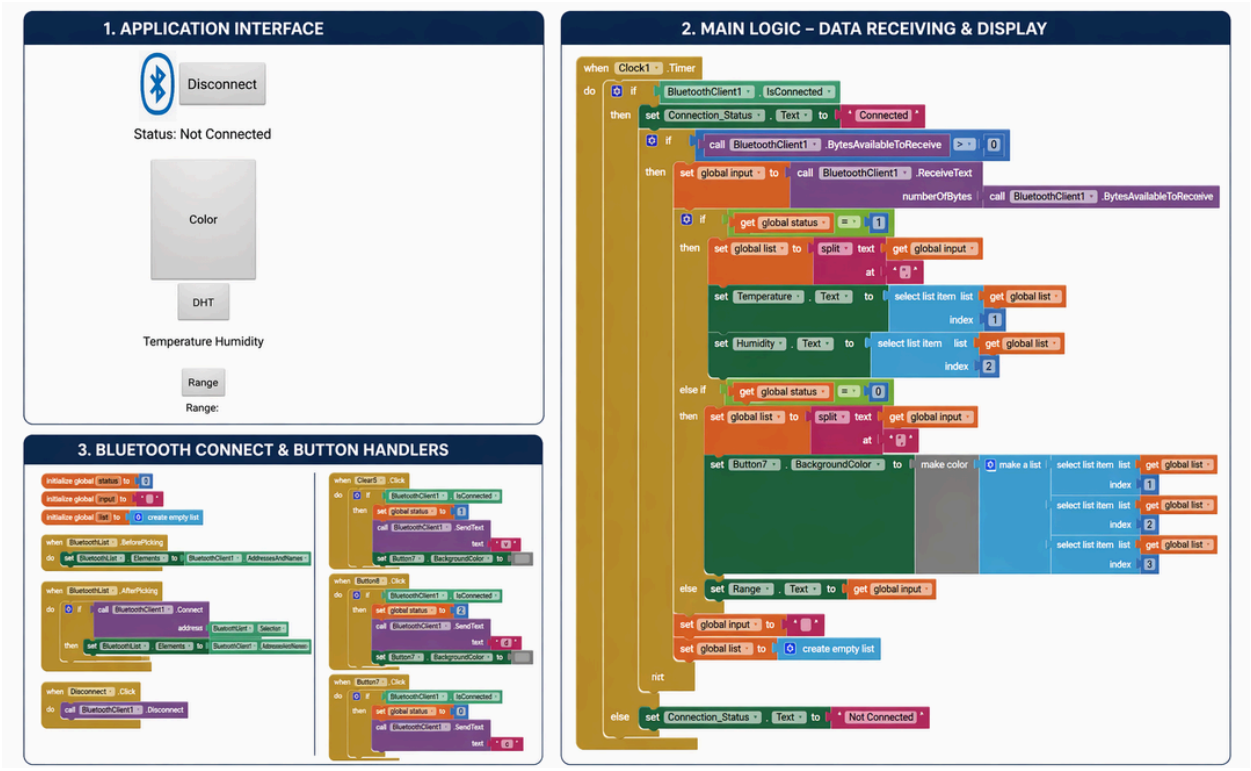

Figure 2: Mobile Application Interface and Logic (MIT App Inventor)

Results and Conclusion

- Real-time environmental data collection achieved
- Stable Bluetooth communication with mobile application
- Accurate sensor readings displayed
- LED feedback correctly reflected sensor input
- Successful integration of embedded system on drone platform

Author: Ibrahem Herzalla