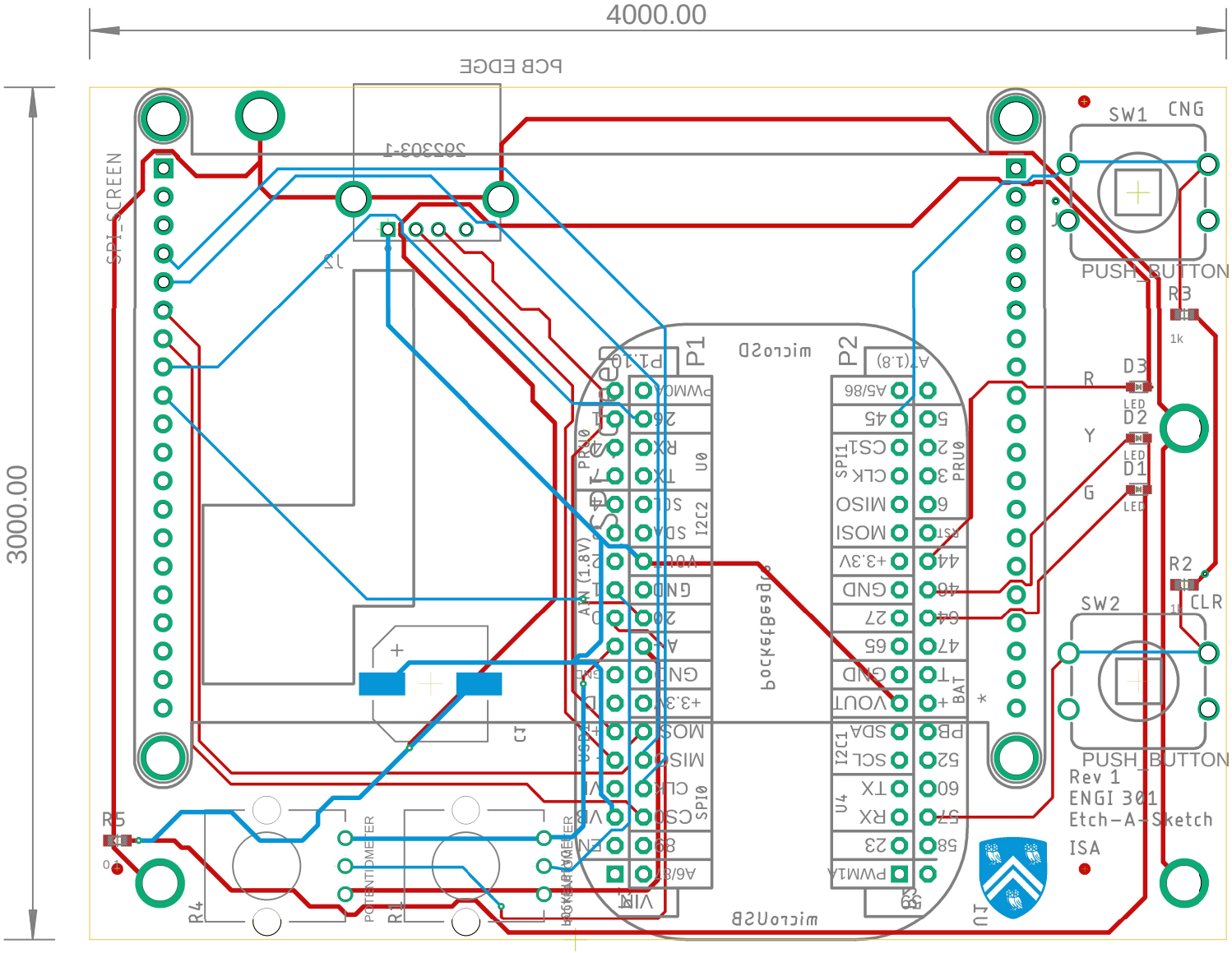

12/13/2022 4:35 PM f=1.80 E:\Rice\Rice F22\Rice-F22\Electrical Engineering\Eagle Libraries\project2.brd