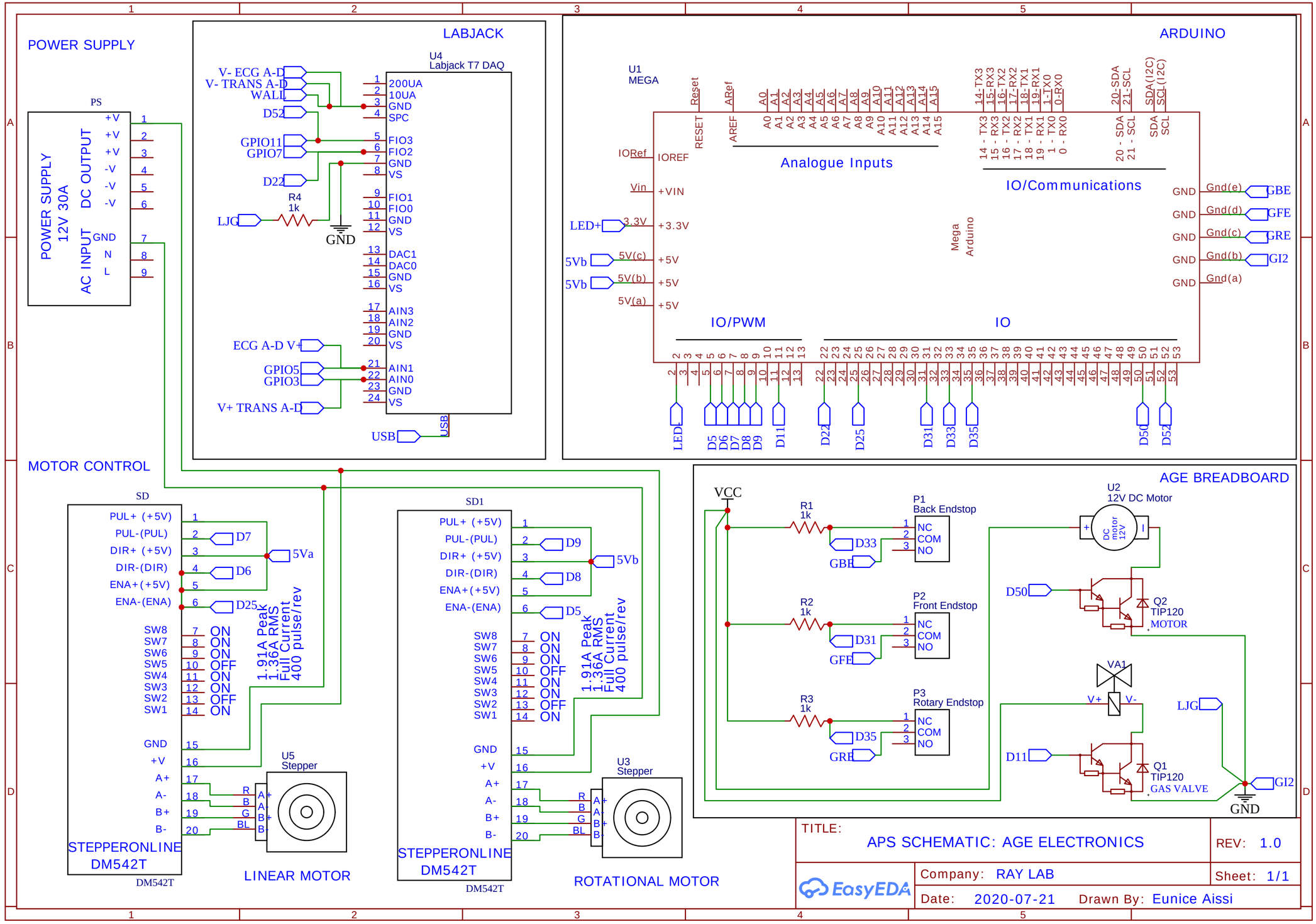
POWER SUPPLY
PS
POWER SUPPLY 12V 30A
DC OUTPUT
+V
+V
+V
-V
-V
-V
AC INPUT
GND
N
L
LABJACK
U4
Labjack T7 DAQ
V- ECG A-D
V- TRANS A-D
WALL
D52
GPIO11
GPIO7
D22
R4
1k
LJG
GND
ECG A-D V+
GPIO5
GPIO3
V+ TRANS A-D
USB
200UA
10UA
GND
SPC
FIO3
FIO2
GND
VS
FIO1
FIO0
GND
VS
DAC1
DAC0
GND
VS
AIN3
AIN2
GND
VS
AIN1
AIN0
GND
VS
ARDUINO
U1
MEGA
Reset
AREF
Analogue Inputs
IO/Communications
IORef
IOREF
Vin
+VIN
LED+
3.3V
+3.3V
5Vb
5V(c)
+5V
5Vb
5V(b)
+5V
5V(a)
+5V
Mega Arduino
GND
Gnd(e)
GBE
GND
Gnd(d)
GFE
GND
Gnd(c)
GRE
GND
Gnd(b)
GI2
GND
Gnd(a)
IO/PWM
IO
LED
D5
D6
D7
D8
D9
D11
D22
D25
D31
D33
D35
D50
D52
MOTOR CONTROL
SD
PUL+ (+5V)
PUL-(PUL)
DIR+ (+5V)
DIR-(DIR)
ENA+(+5V)
ENA-(ENA)
D7
D6
D25
5Va
SW8 ON
SW7 ON
SW6 ON
SW5 OFF
SW4 ON
SW3 ON
SW2 OFF
SW1 ON
1.91A Peak
1.36A RMS
Full Current
400 pulse/rev
GND
+V
A+
A-
B+
B-
U5
Stepper
STEPPERONLINE
DM542T
DM542T
LINEAR MOTOR
SD1
PUL+ (+5V)
PUL-(PUL)
DIR+ (+5V)
DIR-(DIR)
ENA+(+5V)
ENA-(ENA)
D9
D8
D5
5Vb
SW8 ON
SW7 ON
SW6 ON
SW5 OFF
SW4 ON
SW3 ON
SW2 OFF
SW1 ON
1.91A Peak
1.36A RMS
Full Current
400 pulse/rev
GND
+V
A+
A-
B+
B-
U3
Stepper
STEPPERONLINE
DM542T
DM542T
ROTATIONAL MOTOR
AGE BREADBOARD
VCC
R1
1k
D33
GBE
P1
Back Endstop
NC
COM
NO
R2
1k
D31
GFE
P2
Front Endstop
R3
1k
D35
GRE
P3
Rotary Endstop
U2
12V DC Motor
DC motor 12V
D50
Q2
TIP120
MOTOR
VA1
V+
V-
LJG
D11
Q1
TIP120
GAS VALVE
GI2
GND
TITLE:
APS SCHEMATIC: AGE ELECTRONICS
REV: 1.0
Company: RAY LAB
Sheet: 1/1
Date: 2020-07-21
Drawn By: Eunice Aissi
EasyEDA

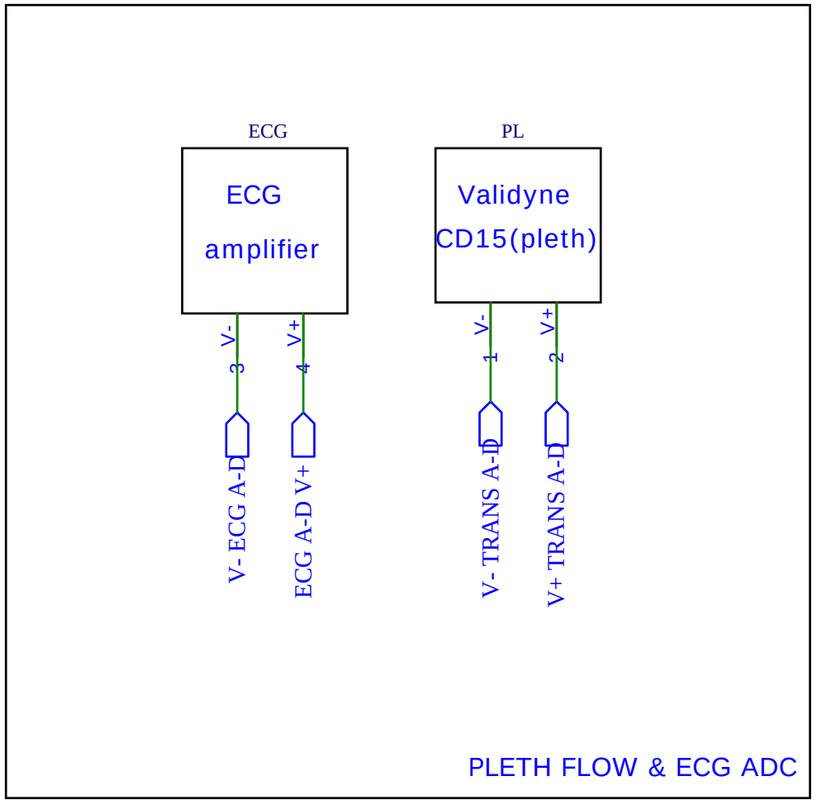

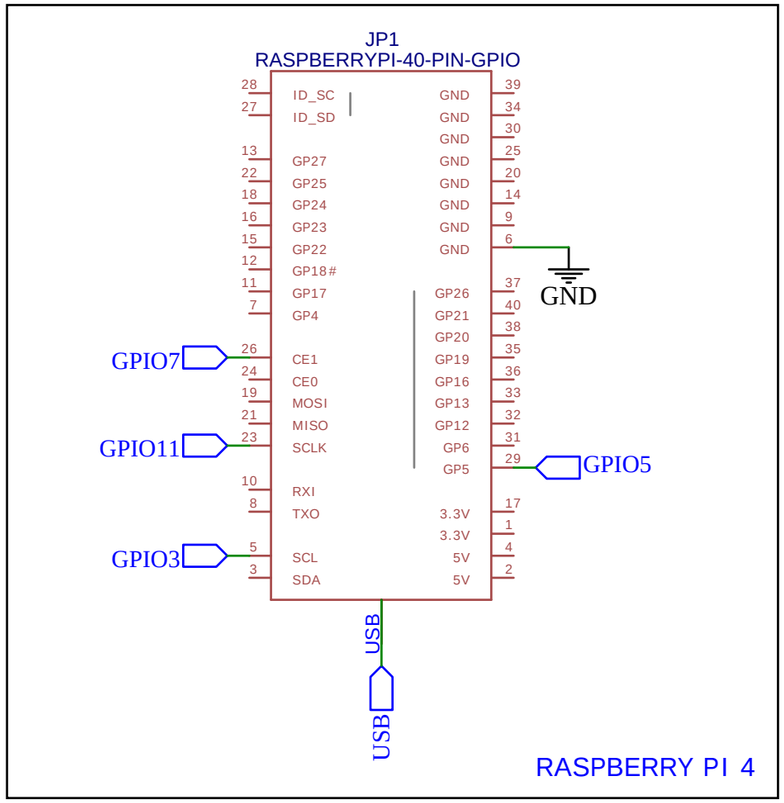

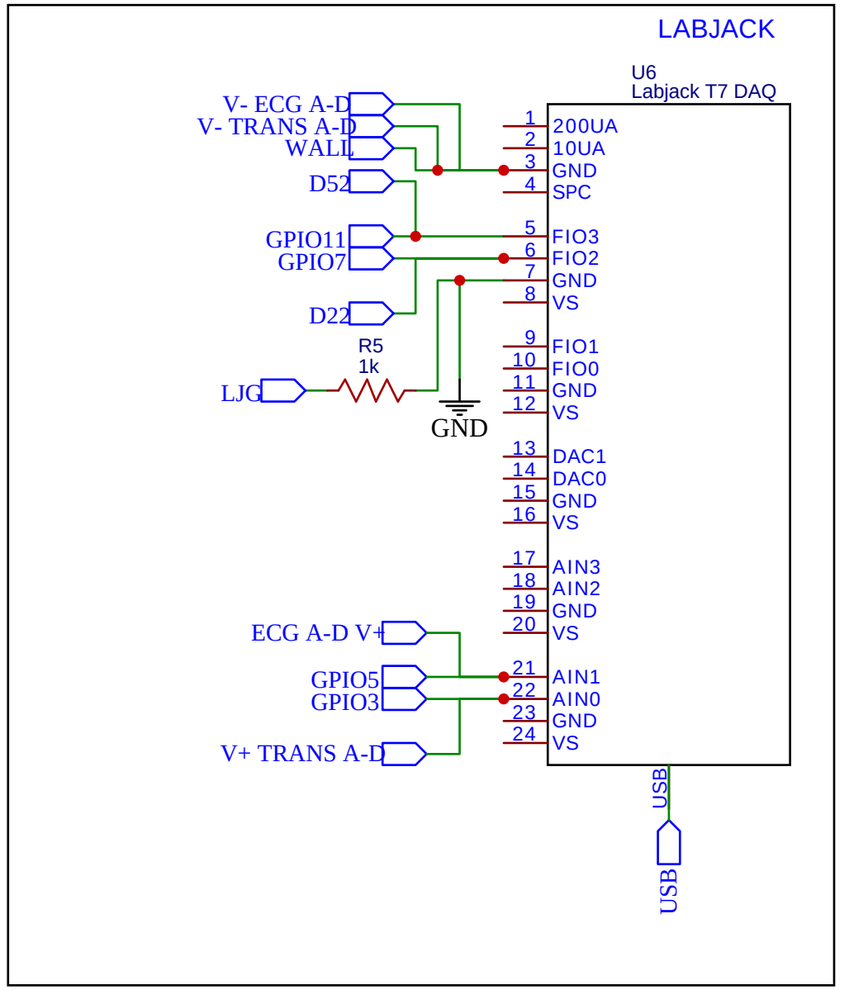

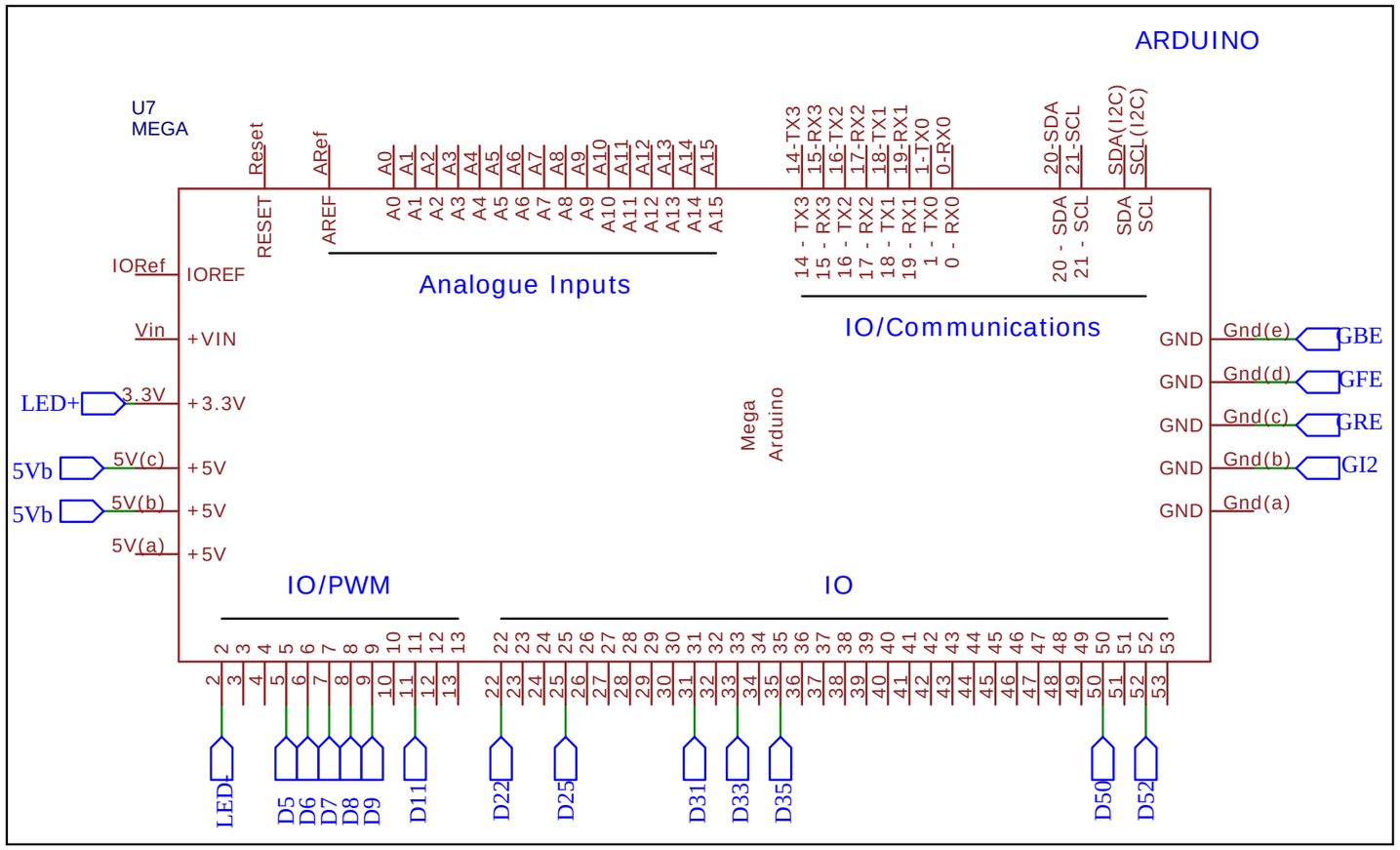

PLETHYSMOGRAPH COMMAND CENTER ELECTRONICS

TITLE: APS SCHEMATIC: PCC ELECTRONICS		REV: 1.0
EasyEDA	Company: RAY LAB	Sheet: 1/1
	Date: 2020-07-21 Drawn By: euniceaissi	