Elevator Main
On Cabin Controller

BLACKPILL DEVOLPMENT BOARD

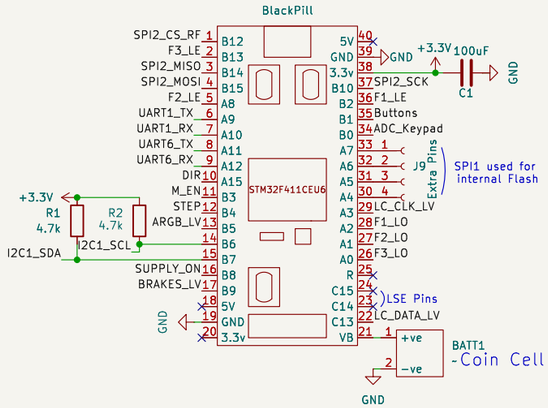

F: Floor

RF: RFID module

LE: Led Indicator to indicate elevator call

LO: Lock

ARGB: Adressable RGB LEDS

LC: Load Cell

MP3 player

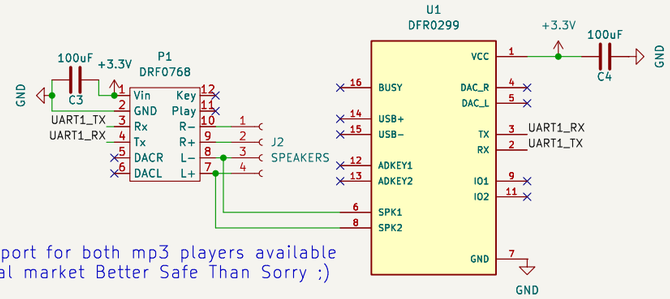

Add support for both mp3 players available in local market Better Safe Than Sorry ;)

40 Pin IDC Travlling Cable

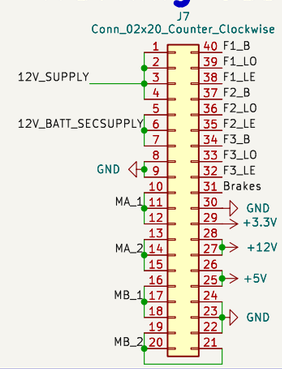

LOGIC LEVEL CONVERTER

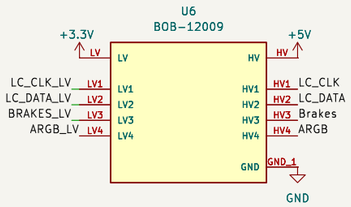

5v Modules

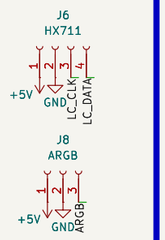

RFID LOCK

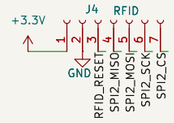

Floor Call Buttons

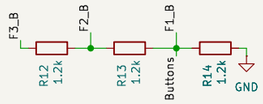

I2c OLED Display

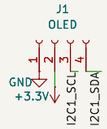

TOF Sensor for APS

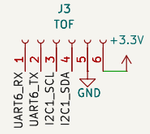

POWER CIRCUIT

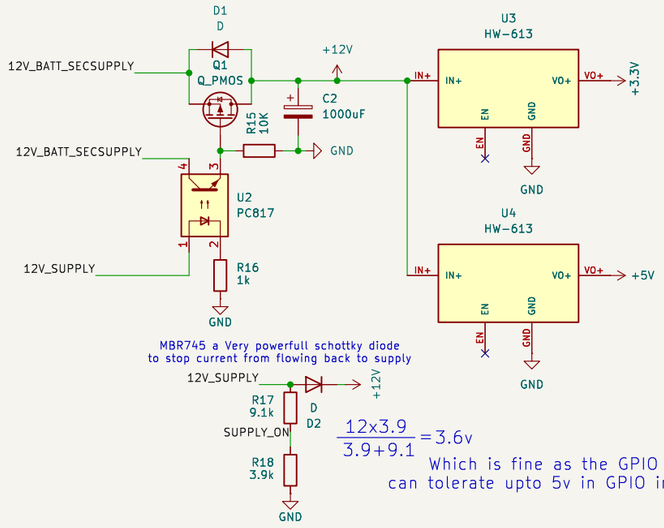

$$\frac{12 \times 3.9}{3.9+9.1} = 3.6v$$

Which is fine as the GPIO Pins can tolerate upto 5v in GPIO input mode

TMC2209 MOTOR DRIVER

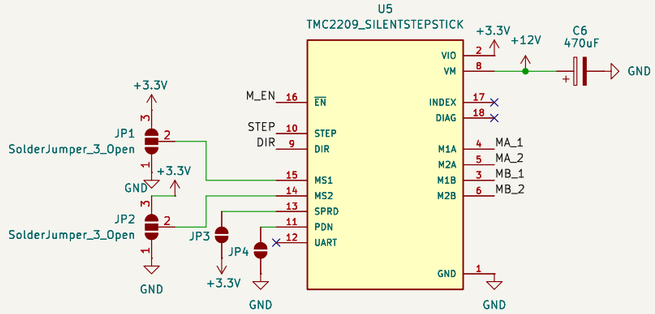

Single Pin Keypad

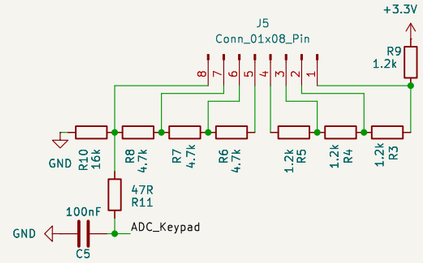

Sheet: /
File: micro.kicad_sch

Title: ELEVATOR CONTROLLER

Size: A3	Date:	Rev:
KiCad E.D.A. 9.0.8		Id: 1/1