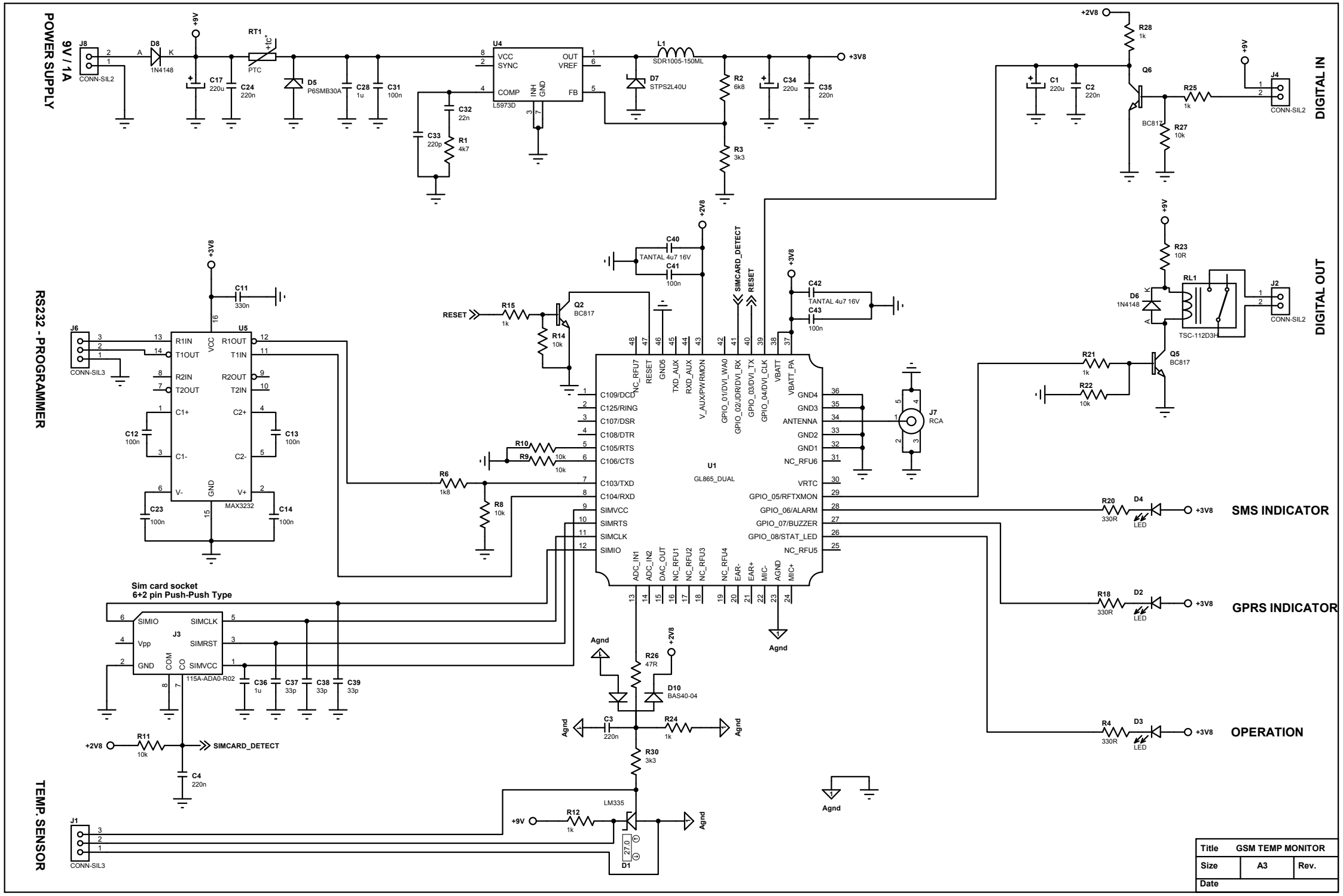
POWER SUPPLY
9V / 1A
J8
CONN-SIL2
D8
1N4148
+9V
RT1
PTC
C17
220u
C24
220n
D5
P6SMB30A
C28
1u
C31
100n
U4
VCC
SYNC
COMP
OUT
VREF
FB
INH
GND
L5973D
C32
22n
C33
220p
R1
4k7
L1
SDR1005-150ML
D7
STPS2L40U
R2
6k8
R3
3k3
C34
220u
C35
220n
+3V8
+2V8
R28
1k
Q6
BC817
R27
10k
C1
220u
C2
220n
R25
1k
J4
CONN-SIL2
DIGITAL IN
R23
10R
RL1
TSC-112D3H
D6
1N4148
J2
CONN-SIL2
DIGITAL OUT
R21
1k
R22
10k
Q5
BC817
RS232 - PROGRAMMER
J6
CONN-SIL3
U5
R1IN
T1OUT
R2IN
T2OUT
R1OUT
T1IN
R2OUT
T2IN
C1+
C1-
C2+
C2-
V-
V+
VCC
GND
MAX3232
C11
330n
C12
100n
C13
100n
C23
100n
C14
100n
RESET
R15
1k
Q2
BC817
R14
10k
C40
TANTAL 4u7 16V
C41
100n
SIMCARD_DETECT
RESET
C42
TANTAL 4u7 16V
C43
100n
R10
10k
R9
10k
R6
1k8
R8
10k
U1
GL865_DUAL
C109/DCD
C125/RING
C107/DSR
C108/DTR
C105/RTS
C106/CTS
C103/TXD
C104/RXD
SIMVCC
SIMRTS
SIMCLK
SIMIO
NC_RFU7
RESET
GND5
TXD_AUX
RXD_AUX
V_AUX/PWRMON
GPIO_01/DVI_WA0
GPIO_02/JDR/DVI_RX
GPIO_03/DVI_TX
GPIO_04/DVI_CLK
VBATT
VBATT_PA
GND4
GND3
ANTENNA
GND2
GND1
NC_RFU6
VRTC
GPIO_05/RFTXMON
GPIO_06/ALARM
GPIO_07/BUZZER
GPIO_08/STAT_LED
NC_RFU5
ADC_IN1
ADC_IN2
DAC_OUT
NC_RFU1
NC_RFU2
NC_RFU3
NC_RFU4
EAR-
EAR+
MIC-
AGND
MIC+
J7
RCA
R20
330R
D4
LED
SMS INDICATOR
R18
330R
D2
LED
GPRS INDICATOR
R4
330R
D3
LED
OPERATION
Sim card socket
6+2 pin Push-Push Type
J3
SIMIO
Vpp
GND
SIMCLK
SIMRST
SIMVCC
COM
CO
115A-ADA0-R02
C36
1u
C37
33p
C38
33p
C39
33p
R11
10k
SIMCARD_DETECT
C4
220n
Agnd
R26
47R
D10
BAS40-04
C3
220n
R24
1k
R30
3k3
TEMP. SENSOR
J1
CONN-SIL3
+9V
R12
1k
LM335
D1
27.0
Title
GSM TEMP MONITOR
Size
A3
Rev.
Date