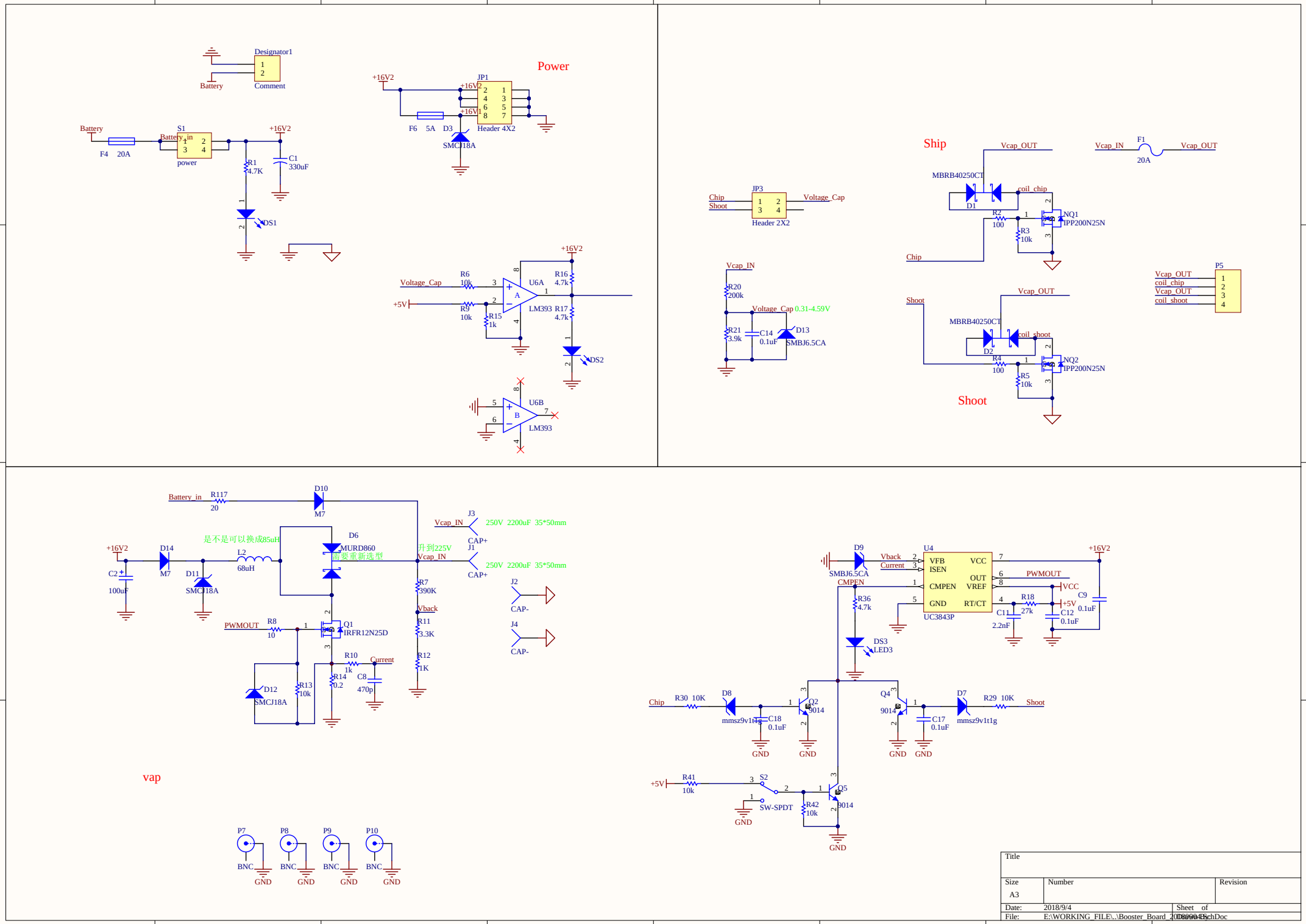
Power
Ship
Shoot
vap
Designator1
Battery
Comment
S1
Battery_in
power
F4 20A
R1 4.7K
C1 330uF
DS1
+16V2
JP1
Header 4X2
F6 5A
D3 SMCJ18A
U6A
U6B
LM393
R6 10k
R9 10k
R15 1k
R16 4.7k
R17 4.7k
DS2
Voltage_Cap
+5V
JP3
Header 2X2
Chip
Shoot
Vcap_IN
R20 200k
R21 3.9k
C14 0.1uF
D13 SMBJ6.5CA
0.31-4.59V
Vcap_OUT
MBRB40250CT
D1
D2
coil_chip
coil_shoot
R2 100
R3 10k
R4 100
R5 10k
NQ1 IPP200N25N
NQ2 IPP200N25N
F1 20A
P5
R117 20
D10 M7
D14 M7
D11 SMCJ18A
C2 100uF
L2 68uH
D6 MURD860
是不是可以换成85uH
需要重新选型
升到225V
J3
J1
J2
J4
CAP+
CAP-
250V 2200uF 35*50mm
R7 390K
R11 3.3K
R12 1K
Vback
Q1 IRFR12N25D
R8 10
PWMOUT
R10 1k
R14 0.2
C8 470p
Current
D12 SMCJ18A
R13 10k
P7
P8
P9
P10
BNC
GND
D9 SMBJ6.5CA
U4
UC3843P
VFB
ISEN
CMPEN
GND
VCC
OUT
VREF
RT/CT
R36 4.7k
DS3 LED3
R18 27k
C11 2.2nF
C12 0.1uF
C9 0.1uF
+5V
VCC
R30 10K
D8 mmsz9v1t1g
C18 0.1uF
Q2 9014
Q4 9014
C17 0.1uF
D7 mmsz9v1t1g
R29 10K
Shoot
R41 10k
S2 SW-SPDT
R42 10k
Q5 9014
Title
Size A3
Number
Revision
Date: 2018/9/4
Sheet of
File: E:\WORKING_FILE\..\Booster_Board_20180904.SchDoc

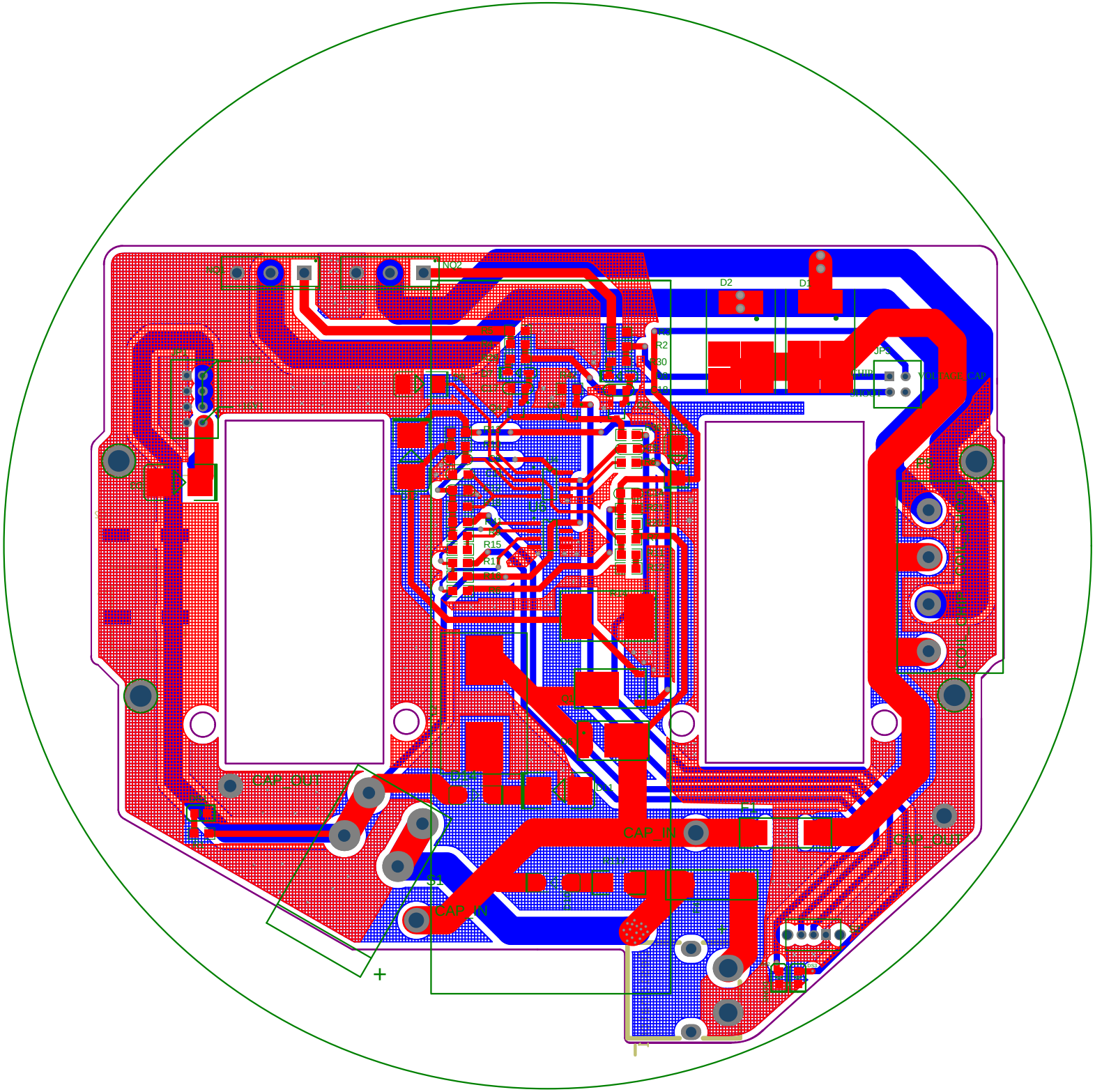
D2
D1
R2
R30
R5
R15
R11
R16
JP3
VOLTAGE_CAP
CAP_OUT
CAP_IN
CAP_OUT
CAP_IN
+