Marching Band LPS

Alex Flores
Vlad Lebedev

Final Report

Table of Contents

1. Concept of Operations Report……..3
2. Functional System Requirements……..15
3. Interface Control Document……33
4. Subsystem Reports…….43
5. System Report……..70
6. Execution and Validation Plans……..85

Marching Band LPS

Alex Flores
Vlad Lebedev

Concept of Operations

Concept of Operations
for
Marching Band LPS

Team <08>

Approved by:

_____
Project Leader Date

_____
Prof. Kalafatis Date

_____
Ethan Barnes Date

Change Record

Rev.	Date	Originator	Approvals	Description
1	9/14/2024	Alex Flores		Draft Release

Table of Contents

1. Executive Summary....9
2. Introduction....9
2.1. Background....9
2.2. Overview....9
2.3. Referenced Documents and Standards....10
3. Operating Concept....11
3.1. Scope....11
3.2. Operational Description and Constraints....11
3.3. System Description....12
3.4. Modes of Operations....13
3.5. Users....13
3.6. Support....13
4. Scenarios....13
4.1. Marching Band Practice....13
4.2. After Practice Analysis....13
5. Analysis....14
5.1. Summary of Proposed Improvements....14
5.2. Disadvantages and Limitations....14
5.3. Alternatives....14
5.4. Impact....14

List of Tables

No tables found.

List of Figures

Figure 1: Overview of Marching Band LPS Operation……11
Figure 2: Marching Band LPS Block Diagram……12

1. Executive Summary

Marching bands require very precise positioning for their shows. Currently, band directors must use a tower to observe marchers' positions visually, which cannot be reanalyzed later. Our goal is to create a tool that can provide immediate feedback to the band director and the marching band by using a Local Positioning System (LPS) that transmits the location of the marchers to a website that can be used to get precise location information that can be analyzed in the moment and reviewed later. This will be done with a system of transmitters worn by the marchers that send position data to stationary receivers that then send the data to the aforementioned website, where various runs can be recorded and viewed later.

2. Introduction

This document introduces the Marching Band Local Positioning System, a system that records each band member's precise location and stores the combination of each members' locations as a singular performance on a website. This system will serve as a visual accuracy checker for every marcher by allowing the user to look at their position from an overhead perspective and compare it to their drillbook. The system will also assist directors and assistant directors to help improve the overall performance of the marching band by having more accurate adjustments for the marchers.

2.1. Background

Whether the strict and straight lines of a military band or the smooth curves and dynamic shapes of a show band, marching bands need precision. Marchers need to be on their marked positions, called "dots", at the right times to create the shape required for the performance. Marching bands currently use printed drill books and digital drill book apps like UDB to find their dots, which is then corrected by a band director on an elevated position. The issue with this process is that only directors are able to see the full picture and give feedback to the marchers. However, a majority of people are visual learners meaning while the marchers can be told these adjustments, it's hard to understand the extent of their inaccuracy. Additionally, the tower is not a true bird's eye view of the field, so there is some level of inaccuracy in the director's analysis.

The Marching Band LPS aims to streamline the process of getting feedback from outside sources so the marchers are able to self analyze and correct their mistakes on their own and then be given feedback from the director if needed.

2.2. Overview

This project will replace the observational aspect of a limited number of individuals correcting marching band movements and expanding it by allowing any individual to review their performance. A Local Positioning System (LPS) will be implemented which will track

marchers' movements and transmit a live feed to the stationary receivers via a transmitter device worn by the marcher. The transmitted position can then be analyzed from the website that displays the marcher's live position.

2.3. Referenced Documents and Standards

- C95.1-2005 - IEEE Standard for Safety Levels with Respect to Human Exposure to Radio Frequency Electromagnetic Fields, 3 kHz to 300 GHz
- IEEE Wi-Fi communication standards: IEEE 802.11
- https://kinexon-sports.com/products/perform-lps/, Kinexon LPS
- https://www.qorvo.com/products/p/DW3110#overview, UWB Chip

3. Operating Concept

3.1. Scope

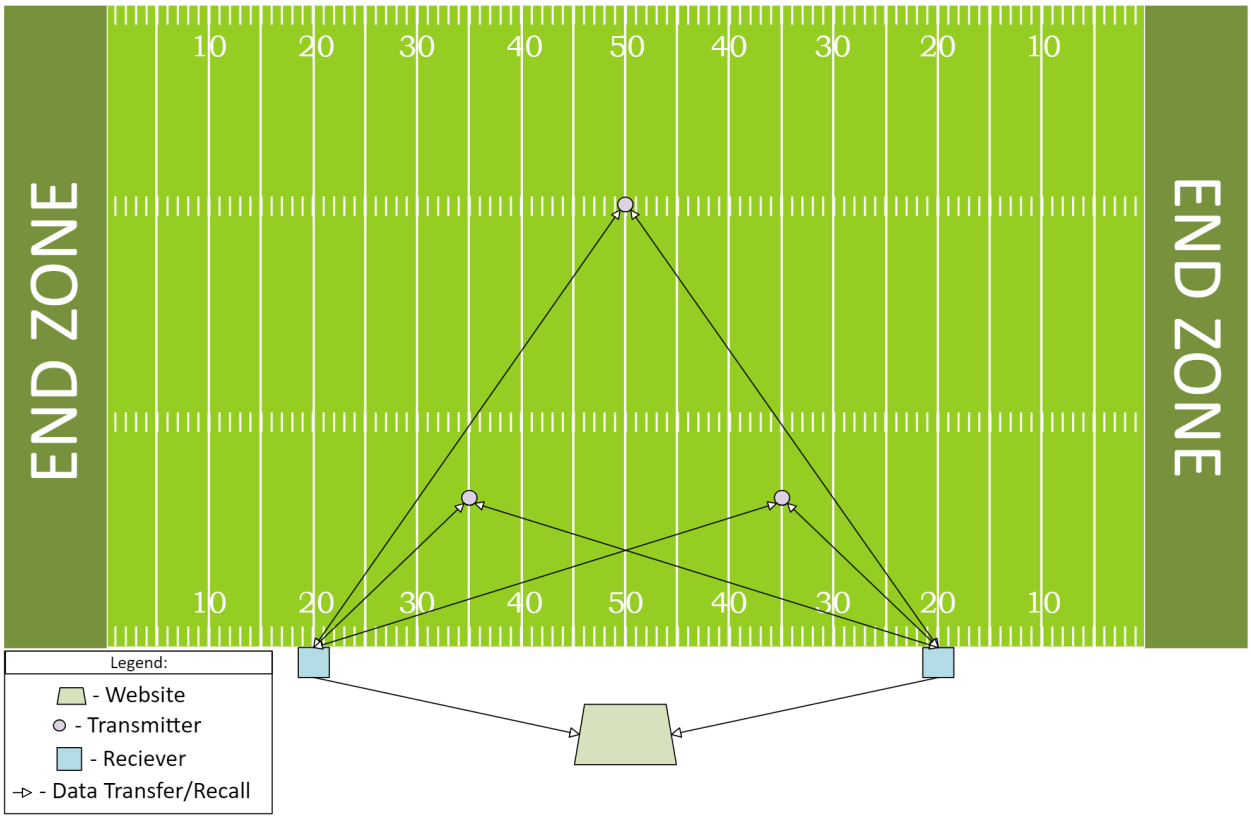

Figure 1: *Overview of Marching Band LPS Operation*

The Marching Band LPS is designed for band directors to track each individual marcher using a Local Positioning System (LPS). With this kind of transmitter and receiver technology integration, the band director will be able to observe and analyze the position of all marchers simultaneously, replacing the use of an elevated platform to observe the marchers from a distance. This system will also be able to record runs to compare with drill sheets and previous runs.

3.2. Operational Description and Constraints

Operation of the Marching Band includes two steps: set up and active use. Set up involves setting up the receivers in their respective positions on the sidelines of the practice field so they are able to pick the locations of the transmitters. Transmitters should also be attached to the marchers, either worn on the waist band or attached to the arm. Transmitters and receivers should also be powered on. Then, marchers and the director then log into the website to view the positions. Active use involves using the website to track the location of the marchers on the field.

Constraints of operations include the following:

- Making sure the transmitters and receivers are properly powered by replacing batteries when needed
- Using the Marching Band LPS in environments where it will not be damaged or affected by precipitation, for safety of the user and for maintaining the transmitters and receivers
- Receivers must be placed in their proper locations so it can calculate the transmitter's locations accurately

3.3. System Description

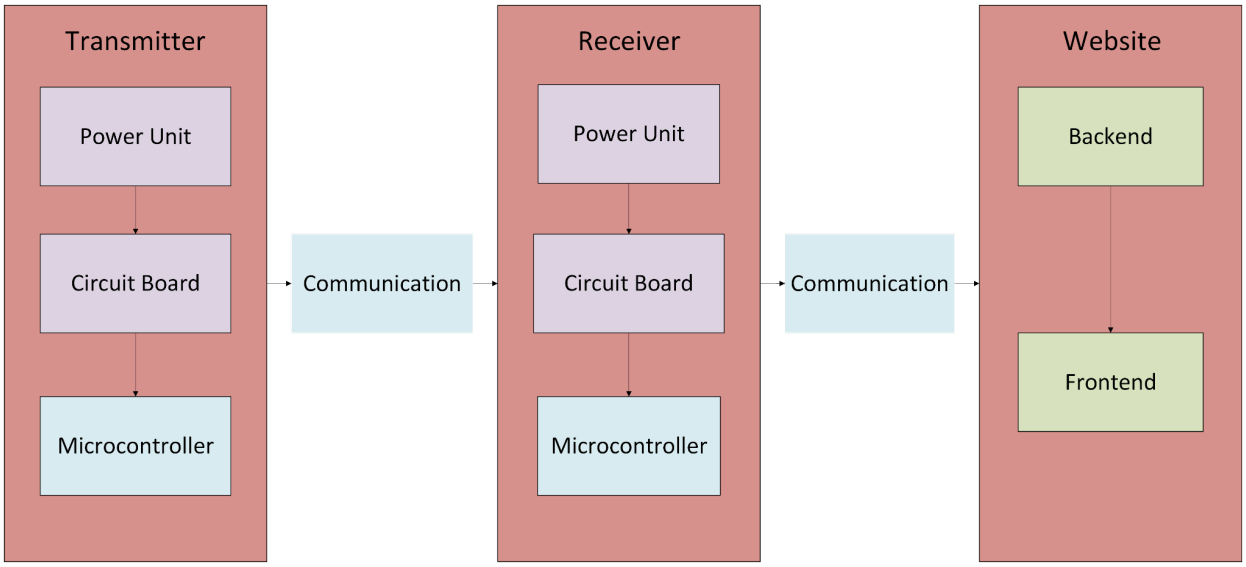

Figure 2: *Marching Band LPS Block Diagram*

- Transmitter: Marcher's will have to wear a small pack to have their location be found. This small pack, called the transmitter, will be able to ping their location with a small margin of error by calculating the distance between the transmitter and the two receiver units by using geometry to find their position on the practice field.
- Receiver: The receiver is a stationary unit that can be attached to a speaker stand that takes in the transmitted location data of each marcher and is able to calculate the marcher's position. It does this by using the distance between it and another receiver unit, and the distance of the transmitter to find the coordinates of the marcher. This marcher data is then sent to the Marching Band Interface to be displayed for marcher and director use.
- Marching Band LPS Interface: To analyze the performance of the marching band, a visible, interactive website will be created. This website will consist of several components that the user can utilize. There will be two types of users: the director and the marcher. The director's side will be able to begin and end the recordings of the marching band performance, add and remove marchers from being tracked, hover over performers to reveal their name, grade, band, and instrument, and select two performances to be replayed and overlaid to indicate changes in accuracy. The marcher's side will be able to hover over performers to reveal their name, grade, band, and instrument, select two performances to be replayed and overlaid to

indicate changes in accuracy, and manipulate the recorded performance so that only one marcher will be visualized while the rest of the band is removed from the overlaid replay.

3.4. Modes of Operations

The two modes of operations are the active use of the system and review use. Active use will receive data transmitted from the devices worn by the marchers and take that data to do calculations for positioning. The Review use operation will be used after a completed run to compare previous rehearsal sessions side by side, allowing easy analysis.

3.5. Users

This system will be marketed to two user types: directors and marchers. Directors would compare previous runs that will be overlaid over the live positioning and then be able to observe differences between the two. Marchers will be the ones having their positions analyzed, but will also be able to access the website to monitor their own positions. The Marching Band LPS will be purchased by school districts for use by their marching band programs.

3.6. Support

Details on how to set up and use the Marching Band LPS will be provided in the user manual. This will include how to set up the receivers and transmitters, and how to access the website. Documentation of the layout of the PCB will be provided as well to look into hardware design questions, while the code for the website and microcontrollers will be commented to provide insight on its functions.

4. Scenarios

4.1. Marching Band Practice

The primary use of the Marching Band LPS will be monitoring the website while practicing. In between movements, the marchers and the director will cross reference the location of marchers shown on the website to where the marcher should be located, which can be found on drill sheets, which can be pieces of paper that list the marchers location or in the UDB app that is commonly used by marching bands.

4.2. After Practice Analysis

The Marching Band LPS tool additionally can be used to go over previously recorded runs. This scenario is better used to investigate the speed and direction of marcher’s movements rather than the endpoint destination. This process is very important towards the end of the competition season when the small details need to be refined as much as possible.

5. Analysis

5.1. Summary of Proposed Improvements

- Marching Band LPS offers more accuracy for position corrections over the current method of visual inspection
- Gives both the marchers and the director a true bird's eye view of the band's positioning, allowing faster self analysis for marchers and overall correction for the director
- The LPS Interface allows the director to go back over past performances with the review mode of operations to give more insight on positioning in a full practice run when compared to recording the run with a camera
- Gives marcher's live, visual feedback to notice if they are out of line and how they can better adhere to the band's current formation

5.2. Disadvantages and Limitations

- Limited range of use due to distance limitations between transmitters and receivers that will be affected by indoor vs outdoor practice sessions
- Precision compared to electronic drill book should be noted, as the LPS receives transmitted signals with a slight margin of error while the electronic drill book has none due to marcher placement being manually done
- Poor weather, such as rain or snow will affect the transmitter and receiver devices negatively due to lack of waterproofing.
- Signal interference from other radio wave transmitters may affect the reliability and usefulness of the LPS transmitters
- Adding marchers into a show would require the production of another transmitter and then coding transmitter into the system

5.3. Alternatives

- Visual inspection from a bird's eye view. This is the commonly used method, which usually requires a tower to be built or another elevated position that can be accessed.
- Recording practice runs with a camera can be used to review a run later, but often can be restricted due to sight lines and camera operator's skill. Additionally, if the operator desires a true bird's eye view, a camera attached to a drone may be used, which adds to the issue of the drone operator's certification and ability.

5.4. Impact

- There is a potential for electronic waste if the equipment becomes damaged.
- The project can serve as an educational tool offering insight in how technology can be used in real world applications.
- Ensure all band members are aware and consented to being tracked for privacy.

- Transmitters and receivers require power and depending on the technology used for the power system it might become a hazard for the marcher, so energy efficient components must be used to mitigate this impact

Marching Band LPS

Alex Flores
Vlad Lebedev

Functional System Requirements

Functional System Requirements
for
Marching Band LPS

Prepared by:

_____
Author Date

Approved by:

_____
Alex Flores Date

_____
John Lusher, P.E. Date

_____
Ethan Barnes Date

Change Record

Rev.	Date	Originator	Approvals	Description
1	9/26/2024	Alex Flores		Draft Release

Table of Contents

1. Introduction……21
1.1. Purpose and Scope……21
1.2. Responsibility and Change Authority…….. 22
2. Applicable and Reference Documents……22
2.1. Applicable Documents……...22
2.2. Reference Documents……...23
2.3. Order of Precedence…….. 23
3. Requirements……..23
3.1. System Definition……23
3.2. Characteristics…… 24
3.2.1. Functional / Performance Requirements…….. 24
3.2.2. Physical Characteristics…….. 25
3.2.3. Electrical Characteristics…… 25
3.2.4. Environmental Requirements…… 27
3.2.5. Failure Propagation……..29
4. Support Requirements……..30
Appendix A: Acronyms and Abbreviations……31
Appendix B: Definition of Terms……32

List of Tables

Table 1: Subsystem Leads……..…22
Table 2: Applicable Documents……...…22
Table 3: Reference Documents……...…23

List of Figures

Figure 1. Marching Band LPS Conceptual Image……21
Figure 2. Block Diagram of System……24

1. Introduction

1.1. Purpose and Scope

The goal of the Marching Band LPS is to track the precise location of individual marchers on a marching band field and then transmit that data to a website that will display each marcher's location for marchers and directors to analyze and make proper adjustments for more accurate formations. This will be done with a system of transmitters worn by the marchers that are connected (through Wi-Fi) to a set of receivers. These receivers will calculate the distance between the transmitter and the two receivers to determine the transmitter's location with a margin of error less than a meter to provide accurate information for location analysis. This information will then be uploaded to a website application that displays each marcher's location, where it will be seen as a live feed and be recorded to view later.

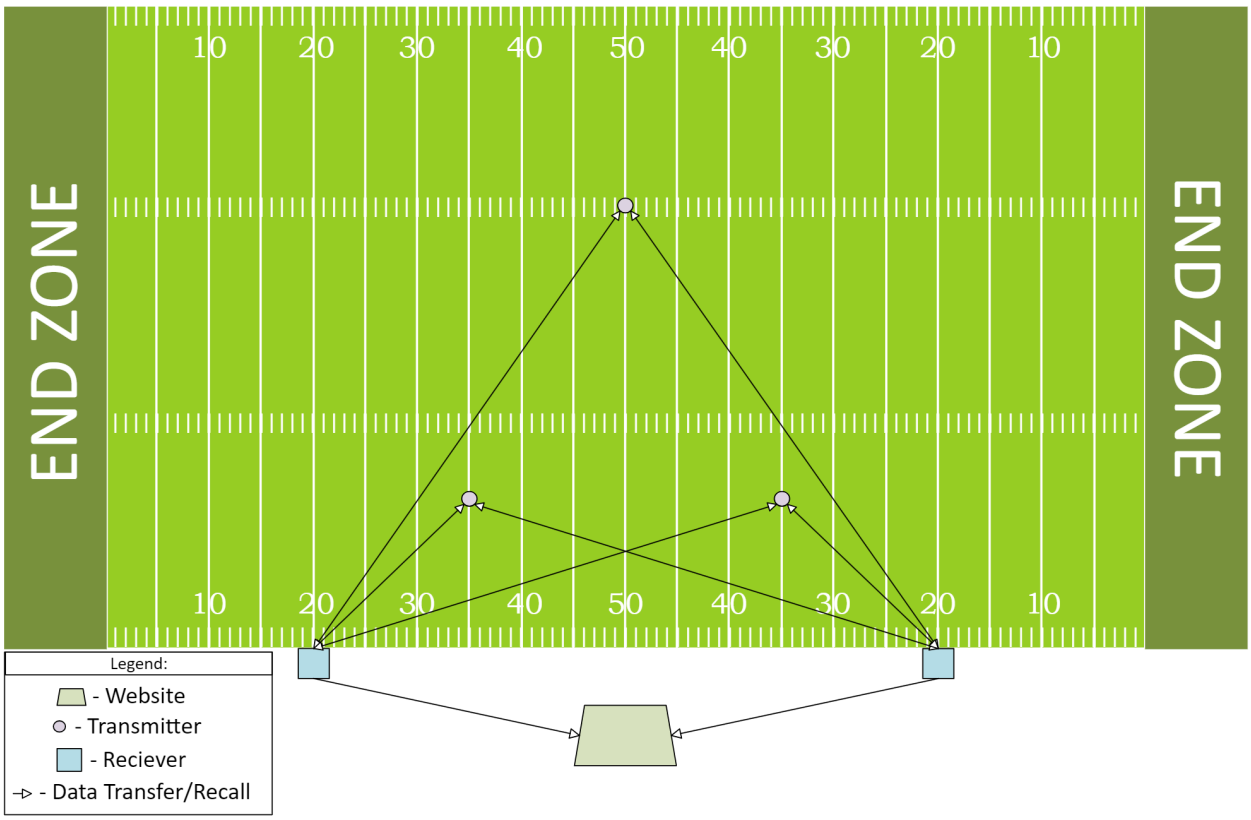

Figure 1: *Marching Band LPS Conceptual Image*

1.2. Responsibility and Change Authority

The responsibility to make sure subsystem requirements are met falls to the team leader, Alex Flores. The requirements for each subsystem can only be changed at the request of Professor John Lusher, Professor Stavros Kalafatis, and the project sponsors, Andrew Morris and Troy Morris.

Table 1: *Subsystem Leads*

Subsystem	Subsystem Lead
Microcontroller Communication	N/A
Power and PCB Design	Alex Flores
Web Application	Vlad Lebedev

2. Applicable and Reference Documents

2.1. Applicable Documents

The following documents, of the exact issue and revision shown, form a part of this specification to the extent specified herein:

Table 2: *Applicable Documents*

Document Number	Revision/Release Date	Document Title
PC95.1	2005	Standard for Safety Levels With Respect to Human Exposure to radio frequency Electromagnetic Fields
IPC A-610E	Revision E – 4/1/2010	Acceptability of Electronic Assemblies
MIL-DTL-38999	Revision L – 5/10/2012	General Specification for Connectors, Electrical, Circular, Miniature, High Density, Quick Disconnect (Bayonet, Threaded, and Breech Coupling), Environment Resistant, Removable Crimp and Hermetic Solder Contacts
MIL-STD-461	Revision G – 12/11/2015	Requirements for the Control of Electromagnetic Interface Characteristics of Subsystems and Equipment
MIL-STD-464	Revision C – 2/1/2010	Electromagnetic Environmental Effects Requirements for Systems
MIL-STD-810	Revision F – 1/1/2000	Environmental Engineering Considerations and Laboratory Tests

2.2. Reference Documents

The following documents are reference documents utilized in the development of this specification. These documents do not form a part of this specification and are not controlled by their reference herein.

Table 3: *Reference Documents*

Document Number	Revision/Release Date	Document Title
C95.6	October 23, 2002	IEEE Standard for Safety Levels With Respect to Human Exposure to Electromagnetic Fields
P1679.4	September 9, 2019	IEEE Guide for the characterization and evaluation of alkaline batteries in stationary applications

2.3. Order of Precedence

In the event of a conflict between the text of this specification and an applicable document cited herein, the text of this specification takes precedence without any exceptions.

All specifications, standards, exhibits, drawings or other documents that are invoked as “applicable” in this specification are incorporated as cited. All documents that are referred to within an applicable report are considered to be for guidance and information only, except ICDs that have their relevant documents considered to be incorporated as cited.

3. Requirements

This section defines the minimum requirements that the development item(s) must meet. The requirements and constraints that apply to performance, design, interoperability, reliability, etc., of the system, are covered.

3.1. System Definition

The Marching Band LPS is designed to be an accurate and reliable application used to track the precise location of a set of marchers within the confines of a football field. It allows users to see the location of each marcher, examine their information such as the marcher’s name and instrument. The system is broken down into three subsystems: Microcontroller Communication, Power and PCB Design, and a Website Application. A diagram of how these systems interact with each other is provided below.

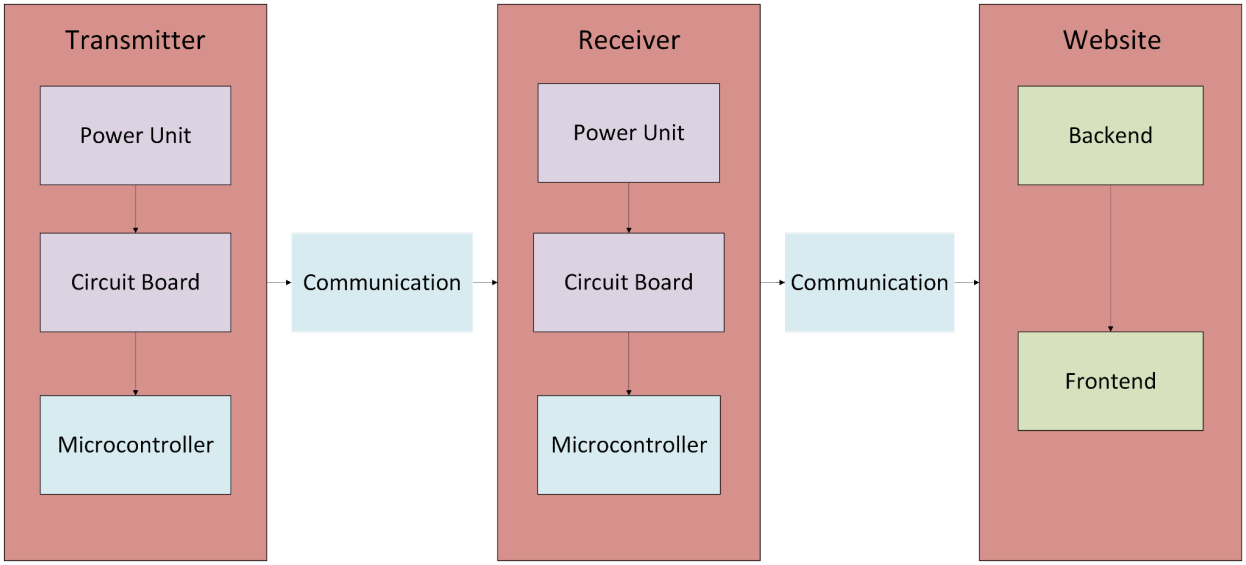

Figure 2: *Block Diagram of System*

Each transmitter and receiver will receive power from a battery pack that is attached to the casing. This battery pack will be powered by standard AA batteries and will be replaced by the user. These batteries will provide power to the circuit board and its parts. The two main components of the board will be the microcontroller and the wireless sensors. The transmitters will communicate with the receivers and be able to calculate the position of the transmitter by calculating the distance between each receiver. Once the receivers have calculated the distance of the transmitter, that data will then be sent to the website application that will then display the location of each transmitter simultaneously so the user will then be able to view the position of each marcher and note any differences between what is displayed on the website and the correct position that can be found in the marching band's drill book. The website will also be able to record a complete run of the marching show to be replayed later by a user for later analysis of marcher position.

3.2. Characteristics

3.2.1. Functional / Performance Requirements

3.2.1.1. Location Precision

The Marching Band LPS will be able to provide the location of each marcher with an accuracy of +/- 1 meter.

Rationale: Marching band positioning must be precise, so our system should be able to report the location of each marcher within a small margin of error.

3.2.1.2. Range of Detection

The Marching Band LPS will be able to detect marchers within a football field with the dimensions of 100 meters by 50 meters.

Rationale: The mentioned dimensions of 100 x 50 meters is the approximate length and width of the standard American football field, not counting endzones. This area is typical for a marching band to perform in.

3.2.1.3. Website Data Process Time

Location data will be processed and displayed on the website associated with the Marching Band LPS in one second or less.

Rationale: The Marching Band LPS is meant to display live information during a performance. Therefore, anything longer than a second would violate the "live" aspect of the system.

3.2.1.4. Website Connection

The website will connect through Wi-Fi to the receivers to transmit data.

Rationale: The Marching Band LPS will use Wi-Fi because it provides more range connection compared to bluetooth.

3.2.2. Physical Characteristics

3.2.2.1. Mass

The mass of the Marching Band LPS, both the transmitter and the receiver units, shall be less than or equal to 1 kilogram.

Rationale: This is a requirement to not cause issues with movement or performance of the marchers, so mass must be minimized.

3.2.2.2. Volume Envelope

The volume envelope of the Marching Band LPS shall be less than or equal to 80 millimeters in height, 80 millimeters in width, and 160 millimeters in length.

Rationale: The smaller the volume envelope is the less it will interfere with the marcher.

3.2.2.3. Receiver Mounting

The mounting for the receivers will be on top of speaker stands that are already being operated by marching bands.

Rationale: The mounting location allows for the receivers to be non-stationary, constant distance which helps improve the calculation of the marcher's location data.

3.2.3. Electrical Characteristics

3.2.3.1. Inputs

a. The presence or absence of any combination of the input signals in accordance with ICD specifications applied in any sequence shall not damage the Marching Band LPS, reduce its life expectancy, or cause any malfunction, either when the unit is powered or when it is not.

b. No sequence of command shall damage the Marching Band LPS, reduce its life expectancy, or cause any malfunction.

Rationale: By design, should limit the chance of damage or malfunction by user/technician error.

3.2.3.1.1 Power Consumption

The maximum peak power of the system shall not exceed 2 watts.

Rationale: This is a requirement so that the system can at least last for an extended marching band practice session.

3.2.3.1.2 Input Voltage Level

The input voltage level for the Marching Band LPS shall be 3.3 V.

Rationale: The main components of our system, the ESP32 and the DWM3000, are designed to run off of 3.3 V.

3.2.3.1.3 External Commands

The Marching Band LPS shall document all external commands in the appropriate ICD.

Rationale: The ICD will capture all interface details from the low level electrical to the high-level packet format.

3.2.3.2. Outputs

3.2.3.2.1 Data Output

The Marching Band LPS shall include a web application for users to view the data transferred from the receivers.
the live formation of the band and for users to analyze accuracy between performances.

Rationale: The Marching Band LPS data passes directly to the marcher's and director's system.

3.2.3.2.2 Visual Output

The Marching Band LPS shall include a visual interface for analyzing location data.

Rationale: Provides a simple and efficient way to view the data and make adjustments on the band field accordingly.

3.2.4. Environmental Requirements

The Marching Band LPS will be designed to operate in ideal conditions for marching. Marchers do not practice under harsh conditions, therefore designs for not be taken into consideration.

Rationale: This is a requirement specified by our sponsor, as making sure the system is durable in extreme conditions is not a focus of the project.

3.2.4.1. Pressure (Altitude)

The Marching Band LPS will be designed to perform in a safe operating altitude range of 0 to 1000 meters above sea level.

Rationale: This range is generally secure for most consumer electronics. Most events are usually below 1500 meters above sea level.

3.2.4.2. Thermal

The Marching Band LPS will be designed to operate between 10°F to 120°F.

Rationale: This range includes both extreme temperatures that the marchers might practice under. The electronics themselves can operate at extreme ranges, but only the marchers ability to perform in safe temperatures are taken into account.

3.2.4.3. External Contamination

The Marching Band LPS will be designed to withstand external contamination such as dust and other natural contaminants.

Rationale: The system will be outdoors, so Band LPS must be protected against common contaminants such as dust.

3.2.4.4. Rain

The Marching Band LPS will be designed to be splash resistant, however it will not be completely waterproof and can not be used under rainy conditions.

Rationale: Marching bands will not practice under rainy conditions to avoid any damage on their instruments, so this system will not be designed to be worn under the rain.

3.2.4.5. Humidity

The Marching Band LPS wil be designed to operate in a 30% to 80% relative humidity range.

Rationale: This range accounts for the average humidity year round in Texas.

3.2.5. Failure Propagation

The Marching Band LPS shall not allow propagation of faults beyond the Marching Band LPS interface.

3.2.5.1. Failure Detection, Isolation, and Recovery (FDIR)

The Marching Band LPS will have a built-in failure detection system in the form of checking which of the transmitter's data is no longer being received by looking at the Marching Band LPS web application and seeing which dot does not appear on start up. From here, the user can single out which transmitter is faulty and remove it for repairs. Additionally, this method of fault detection is used to check when receivers are experiencing a fault. For the ease of the user, the web application will show an error message that tells the user that the data is not being gathered.

3.2.5.1.1 Built In Test (BIT)

The Marching Band LPS shall have an internal subsystem that will determine whether the error is coming from a transmitter or a receiver, allowing for isolation of faulty devices.

3.2.5.1.1.1 BIT Critical Fault Detection

The BIT shall be able to detect a critical fault in the Marching Band LPS percent of the time.

Rationale: This would allow the Marching Band LPS to detect any critical faults and inform the user of which element of the system is malfunctioning.

3.2.5.1.1.2 BIT False Alarms

The BIT shall have a false alarm rate of less than 10 percent.

Rationale: This is a requirement to insure that users will not be misinformed of when a the system is malfunctioning and waste time attempting to fix

3.2.5.1.2 Isolation and Recovery

The Marching Band LPS should provide for fault isolation and recovery by enabling subsystems to be reset or disabled based upon the result of the BIT.

Rationale: As previously mentioned, the BIT should provide accurate information for the removal of faulty receivers and/or transmitters to be repaired or replaced.

4. Support Requirements

The required device(s) is any electronic device that has the ability to open a URL. The electronic device must have the ability to connect to the internet. Additionally, batteries will have to be purchased for the transmitters and receivers for their operation. This group will not provide anything else for the system.

Appendix A: Acronyms and Abbreviations

Below is a list of common acronyms and abbreviations used in this project.

EMC	Electromagnetic Compatibility
EMI	Electromagnetic Interference
GPS	Global Positioning System
GUI	Graphical User Interface
Hz	Hertz
ICD	Interface Control Document
kHz	Kilohertz (1,000 Hz)
LPS	Local Positioning System
mA	Milliamp
IEEE	Institute of Electrical and Electronics Engineers
GHz	Gigahertz (1,000,000,000 Hz)
mW	Milliwatt
PCB	Printed Circuit Board
RMS	Root Mean Square
RF	Radio Frequency
TBD	To Be Determined
URL	Uniform Resource Locator
USB	Universal Serial Bus
UWB	Ultra Wideband

Appendix B: Definition of Terms

Marching Band LPS

Alex Flores
Vlad Lebedev

INTERFACE CONTROL DOCUMENT

Interface Control Document
for
Marching Band LPS

Prepared by:

_____
Author Date

Approved by:

_____
Alex Flores Date

_____
John Lusher II, P.E. Date

_____
Ethan Barnes Date

Change Record

Rev.	Date	Originator	Approvals	Description
-	9/25/2024	Alex Flores		Draft Release

Table of Contents

1. Overview……...39
2. References and Definitions…… 39
2.1. References…….. 39
2.2. Definitions…… 39
3. Physical Interface……... 39
3.1. Weight…….. 39
3.2. Dimensions……..39
3.3. Mounting Locations…… 40
4. Thermal Interface……40
5. Electrical Interface…… 40
5.1. Primary Input Power…….. 40
5.2. Operating Voltage and Current Levels…… 40
5.3. Signal Interfaces……41
5.4. User Control Interface……41
6. Communications / Device Interface Protocols……...41
6.1. Wireless Communications……41
6.1.1. UWB…….. 41

List of Tables

Table 1: Weight of the ESP and DWM modules……...39
Table 2: Dimensions of the ESP and DWM modules……. 39
Table 3: Operating voltage for ESP and UWB modules……..41

List of Figures

Figure 1. Mounting Location……40

1. Overview

This document is provided to provide details on how the transmitters and receivers communicate, as well as various details on them, such as weights of their components and operating values for voltage and current. Additionally, details on where the transmitters and receivers will be mounted is also notes on

2. References and Definitions

2.1. References

Refer to section 2.2 of the Functional Systems Report Document

2.2. Definitions

CCA	Circuit Card Assembly
mA	Milliamp
mW	Milliwatt
mm	Millimeter
GHz	Gigahertz (1,000,000,000 Hz)
TBD	To Be Determined
UWB	Ultra-wideband

3. Physical Interface

3.1. Weight

Table 1: *Weight of the ESP and DWM modules*

Component	**Weight**	**Number of Items**	**Total Weight**
ESP32-WROOM-32D	TBD	1	TBD
DWM3000	TBD	1	TBD

3.2. Dimensions

Table 2: *Dimensions of the ESP and DWM modules*

Component	**Length [mm]**	**Width [mm]**	**Height [mm]**
ESP32-WROOM-32D	25.5	18	3.1
DWM3000	22.7	13	TBD

3.3. Mounting Locations

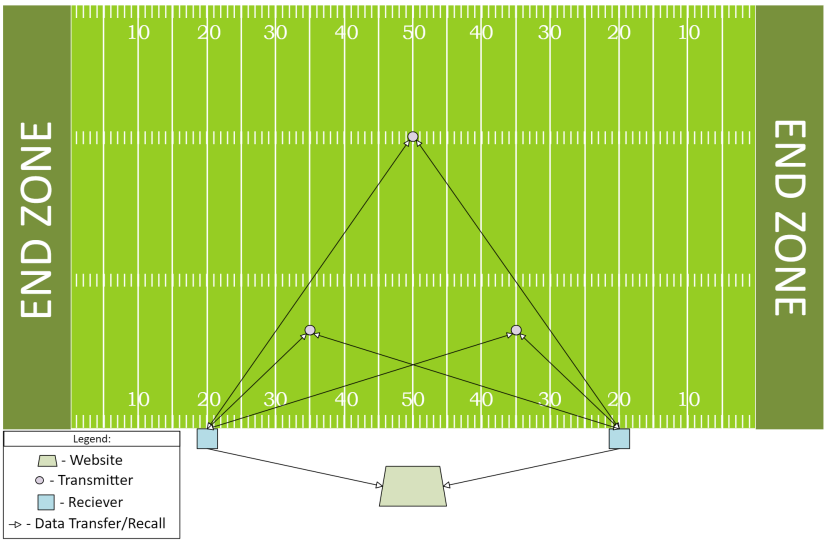

Figure 1: *Mounting Locations*

The mounting locations for the receivers can be seen above in our football field diagram. We plan on mounting the receivers on speaker stands that will be used by the marching band to allow a stationary and elevated position for communication and a constant distance between the receivers.

Transmitters will be mounted on the marcher, most likely attached to the hip via a belt clip or can be placed in a fanny pack if that is worn by the marcher.

4. Thermal Interface

The ESP32 will require a heatsink as it is the main communication unit between the receivers and transmitters, as well as doing the calculations for location data. Adding a heatsink for the ESP32 will make it more reliable and prevent inefficiency due to overheating.

5. Electrical Interface

5.1. Primary Input Power

Both the receiver and the transmitter units will be powered by two, replaceable AA batteries. The holder for these batteries will be mounted inside the housing for the unit.

5.2. Operating Voltage and Current Levels

Table 3: *Operating voltage for ESP and UWB modules*

Component	Voltage [V]	Current [mA]
ESP32-WROOM-32D	3.3	500
DWM3000	3.3	TBD

5.3. Signal Interfaces

The DWM3000 modules will be mounted to a PCB and controlled by our microcontrollers. This will be used for communication between our receivers and transmitters.

5.4. User Control Interface

The user control interface will be a web application where the user can monitor the positioning of the marcher-mounter transmitters as well as record practice runs and review them later.

6. Communications / Device Interface Protocols

6.1. Wireless Communications

6.1.1. UWB

UWB technology will be used for communication between the receiver and transmitters by sending out radio waves.

6.1.2. Wi-Fi

The ESP32 has a built-in Wi-Fi module using IEEE 802.11 protocol. This wireless connection will be used to send tracking data from the receivers and transmitters to a web application for display.

Marching Band LPS

Alex Flores
Vlad Lebedev

SUBSYSTEM REPORTS

SUBSYSTEM REPORTS
FOR
Marching Band LPS

PREPARED BY:

_____
Alex Flores Date

APPROVED BY:

_____
Alex Flores Date

_____
Prof. S. Kalafatis Date

_____
Ethan Barnes Date

Change Record

Rev.	Date	Originator	Approvals	Description
1	12/5/2024	Alex Flores		Draft Release

Table of Contents

Table of Contents.....46
List of Figures.....48
List of Tables.....49
1. Introduction.....50
2. Hardware Subsystem Report.....51
2.1 Subsystem Introduction.....51
2.2 Power Supply.....51
2.2.1 Operation.....51
2.2.2 Validation.....52
2.3 Interpart Communication.....54
2.3.1 Operation.....54
2.3.2 Validation.....55
2.3 Board Design.....55
2.3.1 Operation.....55
2.3.2 Validation.....55
2.4 Subsystem Conclusion.....56
3. Communication Subsystem Report.....58
3.1 Subsystem Introduction.....58
3.2 Plans for Integration.....58
4. Webpage Subsystem Report.....59
4.1 Subsystem Introduction.....59
4.2 Website Registration.....59
4.2.1 Operation.....59
4.2.2 Validation.....61
4.3 Position Data Storing.....62
4.3.1 Operation.....62
4.3.2 Validation.....62
4.4 Position Live Feed.....63
4.4.1 Operation.....63
4.4.2 Validation.....64

4.5 Performance Recordings..... 65
4.5.1 Operation..... 66
4.5.2 Validation..... 66
4.6 Networking Through Wi-Fi..... 68
4.6.1 Operation..... 68
4.6.2 Validation..... 68

List of Figures

Figure 1. Typical Application Circuit for Adjustable Output Voltage Option……...51
Figure 2. Board Design 1……52
Figure 3. Board Design 2……..…… 52
Figure 4. Buck-Boost Converter Results for Input Voltage Range…….... 53
Figure 5. Oscilloscope Showing Fluctuation of Output Voltage…… 53
Figure 6. Command Prompt Showing Successful Flash on the Board…….……54
Figure 7. Constructed Board…….……55
Figure 8. Signup Form……..…… 59
Figure 9. Director's Field……..…… 60
Figure 10. Authenticated Users Database with New Marcher……...…… 61
Figure 11. Profile Database with New Marcher……..……..…….…… 61
Figure 12. User Login Validation…….……..……..…….……62
Figure 13. Data File……..……..……..…….…… 62
Figure 14. Position Database……..……..…….…….……63
Figure 15. Authenticated Users Database..…...……..…….…….……63
Figure 16. Reference Band Field……....…...……..…….…….……64
Figure 17. Band Field with Moved Position..…...……..…….…….……..65
Figure 18. Band Field without "HowdyAgs25" Marcher ……..…….……..65
Figure 19. Recordings Document Parsing..……..…….……66
Figure 20. Recording's Database Before New Recording …..…….…….. 67
Figure 21. Recording's Database After New Recording..……..…….……..67
Figure 22. Recording Overlay With All Marchers.……..……..…….…….. 67
Figure 23. Recording Overlay With Marcher "ABC" Toggled Off…...……..…….…….. 68
Figure 24. Wi-Fi Connection…….……..……..…….……..69

List of Tables

1. Introduction

The Marching Band LPS is a system of receivers and transceivers that will automatically map out the location data of marchers within a football field. This data is then sent to a website that will display the location of the marching band to be seen by both the marchers and the director to receive a full bird's eye view of the overall positioning of the band. Additionally, the director will be able to record runs and view them later for performance review of the band. This system can be broken down into three subsystems, those being hardware, communication, and the website subsystems. The hardware and website portions of this project have been designed and tested within the expectations of this course and are expected to only need minor modifications to be ready for full integration next semester for the full system outlined in the Conops, FSR, and ICD documents. The student in charge of the communication subsystem dropped this course and his part will be fulfilled next semester.

2. Hardware Subsystem Report (Alex Flores)

2.1 Subsystem Introduction

The hardware subsystem can be broken down into three separate components: the power supply, the interpart communication, and the design of the printed circuit board. The power supply is designed to keep a constant supply to the parts on the board no matter what the actual input voltage happens to be to maintain operation even when the battery pack is drained. The interpart communication is to ensure that the ESP32 module and the maUWB module selected are able to communicate with each other for the operations of the system to be performed. The board design is to ensure that the device is able to be worn comfortably by marchers so that their location is accurately shown on the website while also not restricting movement so the data being recorded can be from an unhindered practice run, while also being durable enough to be jostled around while practicing. All of these parts of the hardware were tested to be operational by the standards of the sponsor and his specifications.

2.2 Power Supply

2.2.1 Operation

The main focus of this part of the hardware system is to provide a constant source of voltage to ESP32 and the maUWB module so they are able to operate. The currently planned power source for the transmitters and receivers is a battery pack that uses two double AA batteries, with each one providing 1.5V when at full charge and 0.9V each when nearly drained. As both of the major components of this system require a voltage source that is much more stable and preferably within the range of 3V and 3.5V. Because of this, it was decided to implement a buck-boost converter that would be able to take any input within the range of the battery pack, 1.8V to 3V, and provide the ESP32 and maUWB module with a voltage within the range outlined. The DC to DC converter chosen was the TPS63000DRCR due to its ability to take inputs of 1.8V to 5.5V and deliver an output in the range of 1.2 V to 5.5V with a very high efficiency of 96%, which is determined by the selection of parts. For this, an output of 3.25V was selected for simplicity of resistor selection.

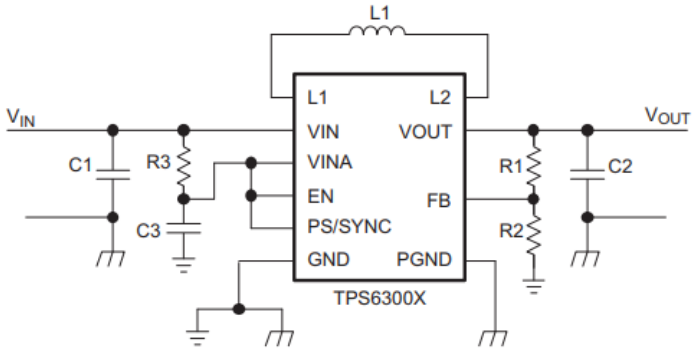

$$R_1 = R_2 \times \left(\frac{V_{OUT}}{V_{FB}} - 1 \right)$$

Figure 1: *Typical Application Circuit for Adjustable Output Voltage Option*

To achieve this output, the above picture and its accompanying equation were referenced to find the correct selection for resistors R1 and R2. The datasheet recommended a resistor value of 200kOhms for R2 for the converter's operation and also stated that the feedback voltage is typically 0.5V. With these values in mind, it was found that R1 should be approximately 1.1 MOhms to achieve the desired output voltage. It is being considered to change the voltage output to 3.3V, but that would require changes to the board design to be made next semester to allow another resistor to be added in series with the original R1 so the total resistance would be 1.12 MOhms. My current design can be seen below next to my potential design to be implemented next semester with its extra resistor.

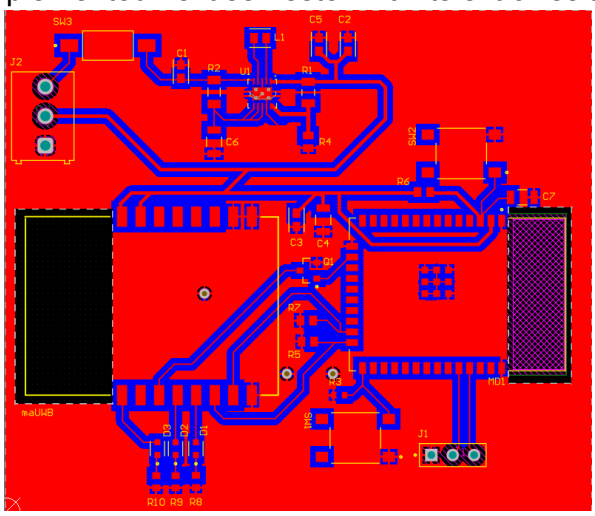

Figure 2: *Board Design 1*

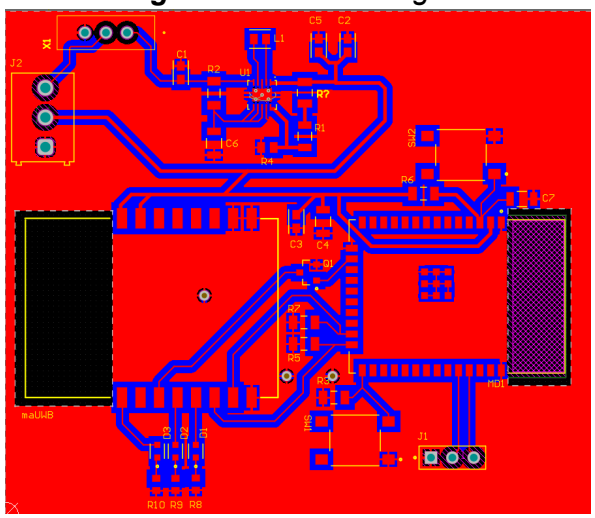

Figure 3: *Board Design 2*

2.2.2 Validation

The first step in my validation process was to simply test that the power supply would work under ideal conditions, those being a 3V input and adjusting the E-Load so that the current was 0.5 A. With this, the output of the buck-boost converter design was measured and found to be 3.25V as expected. With this simple test complete, I then moved on to

ensure that the buck-boost converter would be able to operate at a variety of input voltage levels that were outlined above. Using input values of 1.8V and 3V to simulate a nearly dead battery pack and a fully charged one, the resulting output was measured. Throughout this process, current draw was also manipulated to examine how the converter would operate when draw was low or high. The results for these tests can be seen below with each input resulting in a constant output of 3.25 no matter what input was used within the range.

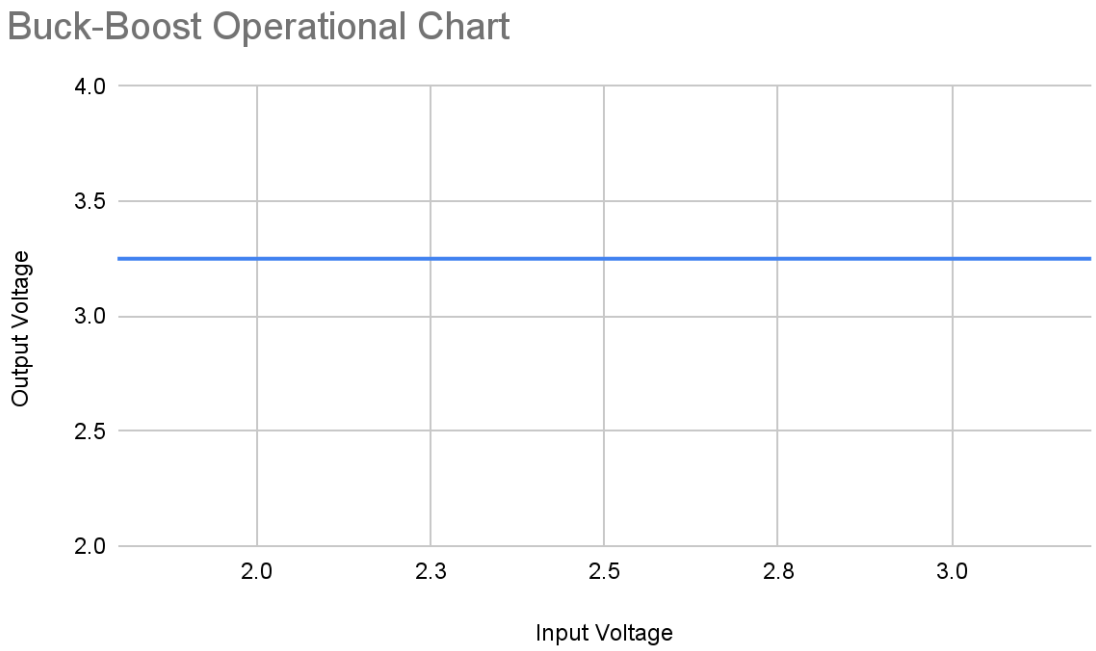

Figure 3: *Buck-Boost Converter Results for Input Voltage Range*

The output was also measured with an oscilloscope to ensure that the conversion was truly DC to DC. The peak to peak values were found to be within a constantly fluctuating range of 40mV to 80mV, but when put under the oscilloscope, the lab's power supply returned the same result, so this peak to peak was assumed to be due to inaccuracies within the measurements. A screenshot of the oscilloscope values can be found below. With these output values under the aforementioned conditions being confirmed to be at the desired output voltage, this part of the subsystem was validated.

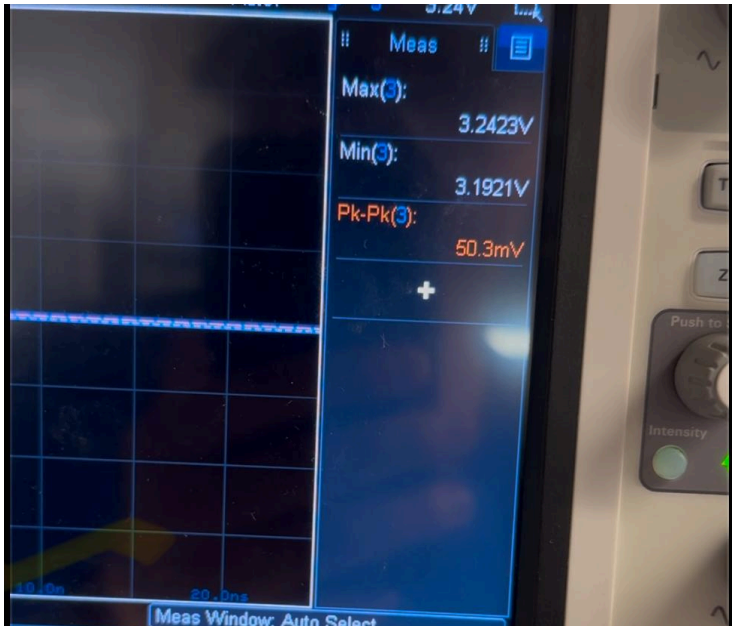

Figure 4: *Oscilloscope Showing Fluctuation of Output Voltage*

Additionally, current draw for the ESP32 and the maUWB module were taken into account to determine if the power supply could maintain operation for these two components for a sufficient amount of time for a band practice. During their max operation, the ESP32 should average at about an 200mA, while the maUWB module should operate at about 60mA. It was calculated that two double A batteries have a capacity of 2 Ah, so with the previously acquired values, the system would be able to run for approximately 10 hours before the batteries needed to be replaced, which is more than sufficient for the average band practice run time of an hour and a half.

2.3 Interpart Communication

2.3.1 Operation

The ESP32 must be able to have code flashed to it for the system to be able to operate. This must mean the configuration of the auxiliary parts, such as pulldown resistors and other components that were suggested to be added by Dr. Lusher and the ESP32 datasheet, are configured correctly and the board is able to receive code from the 3 pin header. With this code, the ESP32 is then able to do the necessary location calculations and be able to instruct the maUWB on how it should function, more specifically on if the board should be functioning as a transmitter or receiver.

2.3.2 Validation

To ensure that the ESP32 had been configured correctly and was able to flash code correctly, I attempted to flash a simple “Hello World” command to the ESP32. This was done by taking the sample code that was installed with the ESP32 IDE and beginning the flashing process. While it was installing, I held down the BOOT button then tapped the EN button, both were implemented into the board design at the instruction of Dr. Lusher. Once the bootloader was entered, the code was flashed to the ESP32. The command prompt showing the successful flash can be seen below.

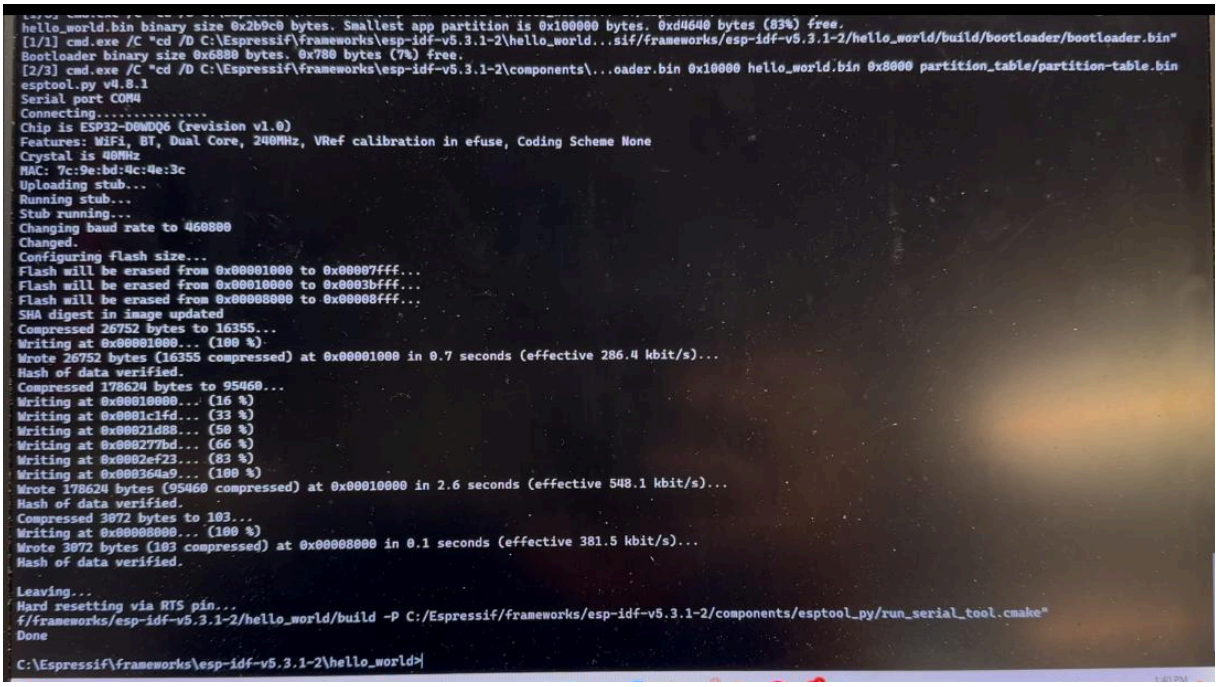

Figure 5: *Command Prompt Showing Successful Flash on the Board*

I was unable to test the communication between the ESP32 and the maUWB module this semester due to issues with the shipment of the maUWB module. This has been acknowledged by the ECEN business department and Dr. Lusher. However, the ESP32 and the maUWB were configured as instructed in their respective datasheets, so once tested, should work as expected.

2.3 Board Design

2.3.1 Operation

As per the specifications of our sponsor the hardware of this system should be able to be worn by a marching band student and remain operational during marching band practice without restricting movement. For this, a limit was set that was approved by our sponsor that the physical package should be equal to or less than 80 mm by 80 mm by 160 mm in terms of volume and less than a kilogram in weight so as to not restrict the movement and performance of the marcher. All this should be true while the physical unit also stays together.

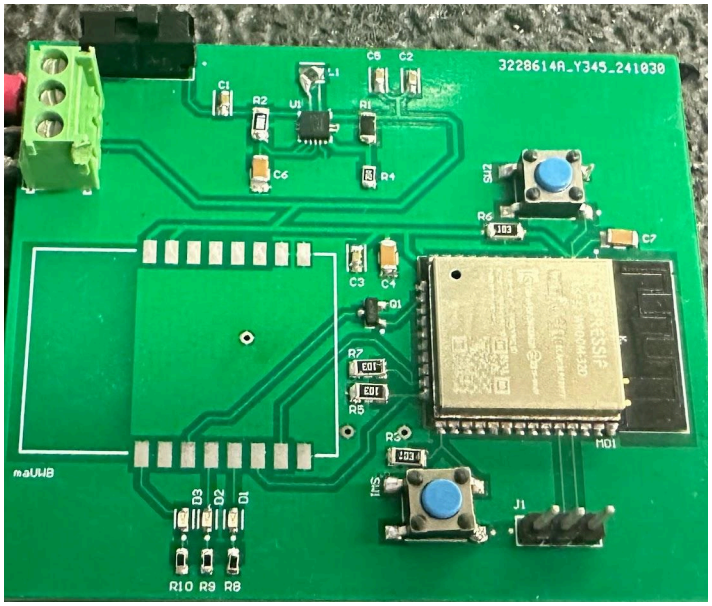

Figure 6: *Constructed Board*

2.3.2 Validation

To validate the physical dimension criteria mentioned above, simple measurements were taken with a tape measure and a scale. While not able to fully validate this part of the hardware due to the physical casing being saved to be done in ECEN 404, I still took these measurements to be sure that the current design can fit into the requirements when the internal battery pack is added. An image of the circuit board can be seen below.

Upon measurements being taken, it was found that the board had a height of 60 mm, a length of 70 mm, and a height of 30 mm. With this in mind, it can be assumed that with a battery pack of dimensions of 60 mm in length, 30 mm in width, and 13 mm in height, the board and the battery pack can be implemented into a casing that would fit within the desired physical dimensions.

When weighed, it was found that the board had a mass of approximately 60 grams with all of the parts soldered onto it. With the weight of a standard double A battery being 23 grams and the battery holder being 6.5 grams, the total mass should be approximately 110 grams. This gives plenty of room for the mass of the physical casing to be under our mass limit.

To test stability of the board, it was physically shaken for a few seconds to ensure that all parts on the board were soldered on securely and would not come loose during use by the marcher. The board was tested again with the criteria listed in the power supply and interpart communications and still worked as expected.

2.4 Subsystem Conclusion

Overall, each part of my subsystem is either working as expected or is in place to be properly integrated next semester. The power supply effectively provides the correct voltage for the components on the board as well as providing it for enough time to be considered practical. The ESP32 is able to have code flashed to it when prompted with the correct

button inputs and is in place to be able to properly communicate with the maUWB module when prompted by the communications code. Finally, the board is in the correct range so that it will be able to fit within the physical size limits set by the sponsor for maneuverability for the user. Next semester, the finishing steps of fully constructing the hardware will be completed, by soldering the five boards required for full system testing, integrating the battery packs, and then creating the housing for each unit.

3. Communication Subsystem Report (Formerly Juan Alcala)

3.1 Subsystem Introduction

The communications subsystem was designed to provide the method for how the data from the receivers and transmitters would be sent to one another and then ultimately transmitted to the website for visual display. It was planned for this to be accomplished through the using UWB, using the MakerFabs maUWB module, for transmitter and receiver communication and then have the data be transmitted to the website through Wi-Fi connection, by using the ESP32's built in Wi-Fi connection features. With these, we would be able to have the system be able to effectively transmit, receive, and display the data over a range of 100 meters and with an accuracy of less than half of that, which would be within our desired range of accuracy.

3.2 Plans for Integration

As mentioned in the introduction, the person in charge of this subsystem dropped out of the course and thus there has been no progress made on this subsystem outside of the planning that was initially done by the full team. As this is a very crucial part to our system as a whole, we have discussed with Professors Lusher and Stavros about what is to be done next semester for full subsystem integration. The current paths forward are to potentially assign this subsystem to a student who is entering ECEN 404 without a group or to have one of the remaining group members complete the subsystem using a much simpler execution method, such as Arduino IDE. Next semester when more details are available, we will be told as to which opinion will be selected.

4. Webpage Subsystem Report (Vlad Lebedev)

4.1 Subsystem Introduction

The webpage subsystem provides an interface that allows users to make use of the hardware. Position data transfers from the transmitter to the receiver and then from the receiver, the data is sent to the webpage through Wi-Fi. The webpage displays these positions for every marcher on the field so that directors and marchers can analyze their performances and make adjustments as needed.

4.2 Webpage Registration

4.2.1 Operation

To move past the homepage the user must have an account. This requires a user to sign-up if they do not already have an account. Figure 7 displays the signup form that users will be prompted to fill out.

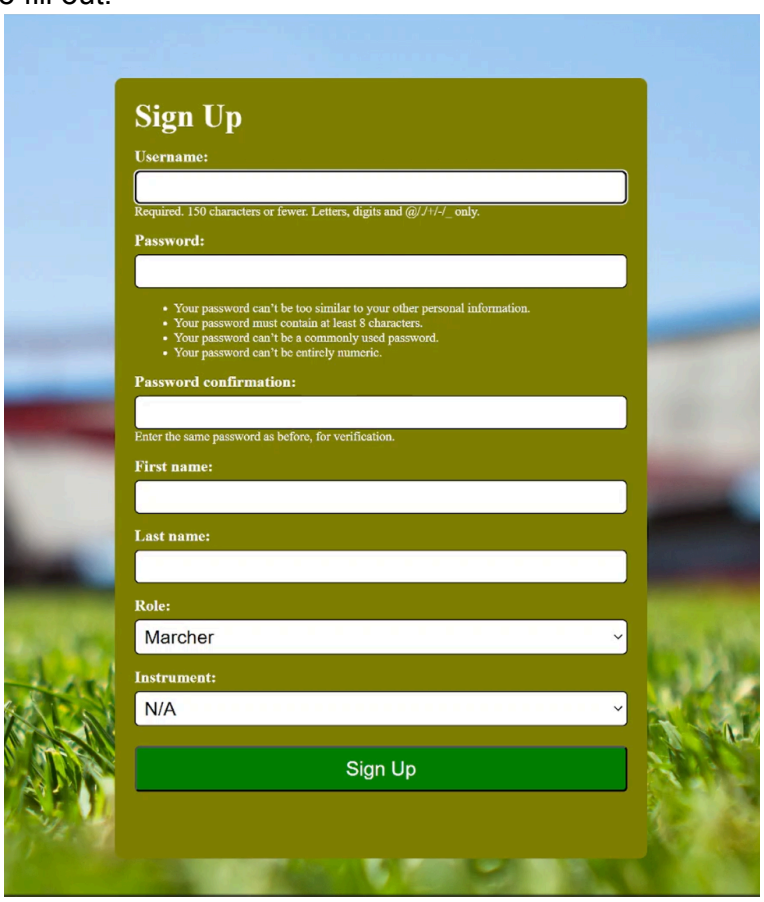

Figure 8: *Signup Form*

The user is given a username, password, first name, last name, role, and an instrument. The requirements for the username are provided below the input box. On top of these requirements the username is unique for all users meaning that no two users are allowed to have the same username, if that situation occurs the user trying to match usernames is prompted to find a new username. The password also has requirements that are provided below the input box and must match the password confirmation to proceed. The first and last names are fields that users are allowed to match between other users. The role is defaulted to marcher but if not a marcher the other role provided is director where each role sends the user to different page layouts. And finally the user is able to select an instrument from the following list: N/A, Other, Flute/Piccolo, Clarinet, Bass Clarinet, Alto Saxophone, Tenor Saxophone, Baritone/Euphonium, Sousaphone, and Drum Line. After signing up the user proceeds to the login page.

All the pages (except for the homepage and subsystem intro page) force the user to login before the page is able to be rendered. Once a user logins in with the correct corresponding username and password, the user renders the band field page as seen in Figure 8. Figure 8 is the band field for the director. Marchers have a similar band field layout, however, the difference is that marchers do not have the option to make recordings. Once users are done with their analysis, or have special permissions to go on a directors account, they are allowed to logout and login to a new account.

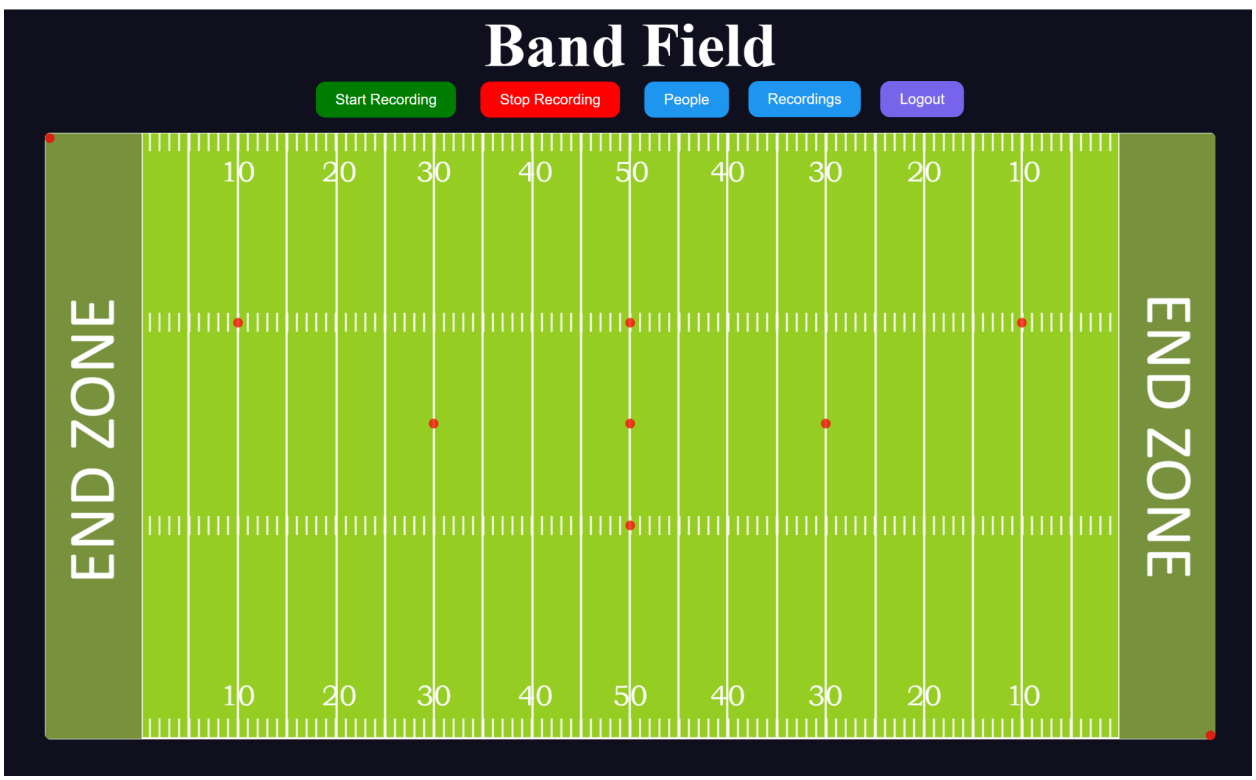

Figure 9: *Director's Field*

4.2.2 Validation

To validate a user signing up, once the signup button is clicked, the new user must be updated in the authenticated users database with a new row and the profile's database must also be updated with a new row that links with the authenticated users database. Figure 9 shows that once a new user "HowdyAgs25" was created they are added to the authenticated users database and have a row in the profiles database as seen in Figure 10.

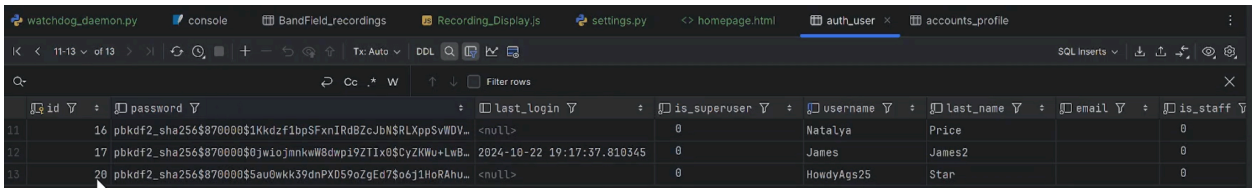

	id	password	last_login	is_superuser	username	last_name	email	is_staff
11	16	pbkdf2_sha256$870000$1KKdzf1bpSFxnIRdBZcJbN$RLXppSvWDV…	<null>	0	Natalya	Price		0
12	17	pbkdf2_sha256$870000$0jwiojmnkwW8dwpi9ZTIx0$CyZKWu+LwB…	2024-10-22 19:17:37.810345	0	James	James2		0
13	20	pbkdf2_sha256$870000$5au0wkk39dnPXD59oZgEd7$o6j1HoRAhu…	<null>	0	HowdyAgs25	Star		0

Figure 10: *Authenticated Users Database with New Marcher*

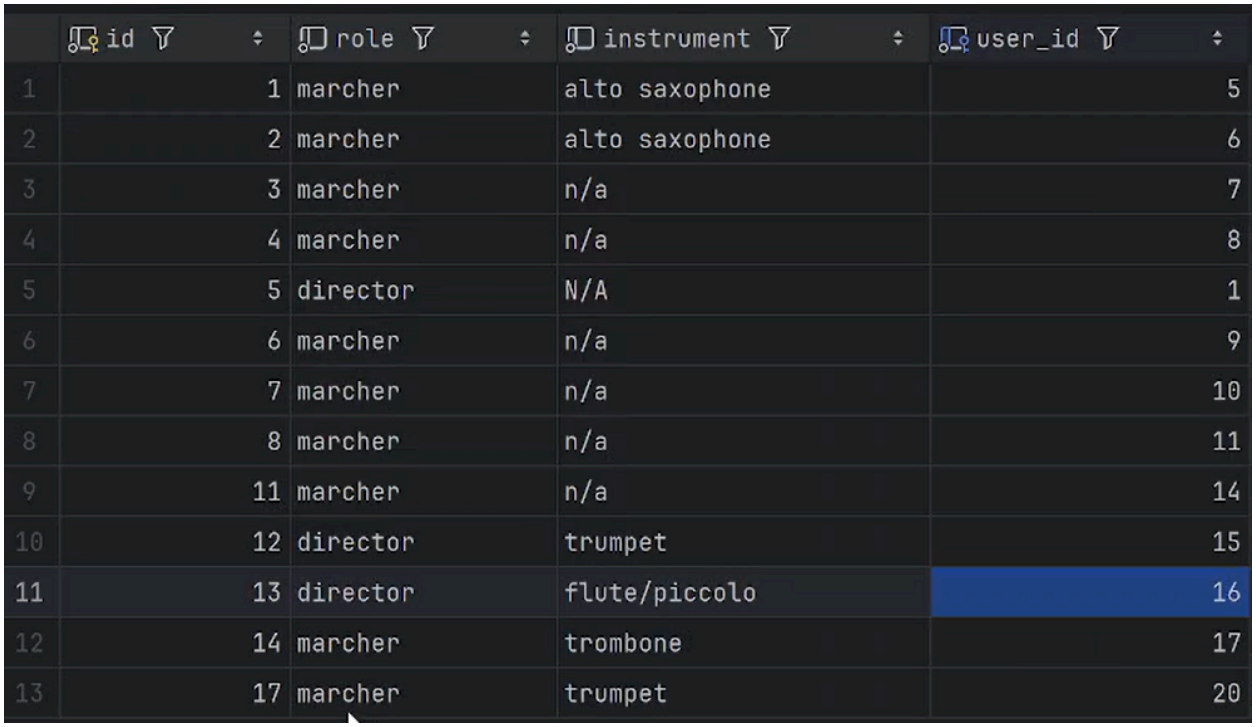

	id	role	instrument	user_id
1	1	marcher	alto saxophone	5
2	2	marcher	alto saxophone	6
3	3	marcher	n/a	7
4	4	marcher	n/a	8
5	5	director	N/A	1
6	6	marcher	n/a	9
7	7	marcher	n/a	10
8	8	marcher	n/a	11
9	11	marcher	n/a	14
10	12	director	trumpet	15
11	13	director	flute/piccolo	16
12	14	marcher	trombone	17
13	17	marcher	trumpet	20

Figure 11: *Profile Database with New Marcher*

To validate the login two things are reviewed. The first criteria is that once a user is logged in they must be sent to the right page render (either marcher render or director render) depending on what they selected in the signup form. When logging in "HowdyAgs25" they did get sent to the marcher's field and when logging in with a director account they were sent to the director's field. The second criteria is that the user's last login is updated in the authentication database as seen in Figure 11.

	id	password	last_login	is_superuser	username	last_
11	16	pbkdf2_sha256$870000$1Kkdzf1bpSFxnIRdBZcJbN$RLXppSvWDV…	<null>	0	Natalya	Price
12	17	pbkdf2_sha256$870000$0jwiojmnkwW8dwpi9ZTIx0$CyZKWu+LwB…	2024-10-22 19:17:37.810345	0	James	James2
13	20	pbkdf2_sha256$870000$5au0wkk39dnPXD59oZgEd7$o6j1HoRAhu…	2024-11-26 08:54:55.204207	0	HowdyAgs25	Star

Figure 12: *User Login Validation*

And to validate the logout the user must logout and try to access any of the pages outside of the homepage or subsystem intro page. If the user is redirected to the login page that implies that the user is not logged into an account meaning they successfully logged out.

4.3 Position Data Storing

4.3.1 Operation

The receiver sends position data to the webpage. To process this data the software must read in the data and store the data in a database for later usage. The assumption was made that the data being sent over separates each user in different rows in a text file. And in each row there are three crucial pieces of information: username, x-coordinate, and y-coordinate. This data is read at the page render of the band field and is stored in a positions database that will be utilized for the live feed.

4.3.2 Validation

To validate the data was stored correctly, the x-coordinates and y-coordinates were compared between the data file in Figure 12 and the position's database 13. And to make sure the correct user's coordinates are being updated/registered, the linking user id was compared between the position database in Figure 13 and the authenticated users database in Figure 9 and Figure 14 which all matched.

```
1   ABC1 193.5 190
2   Zebra 596 192
3   HIPPO 395 297
4   Blue 596 297
5   Red 809 297
6   Alex 596 403
7   Brown 1013 192
8   James 3000 3000
9   ABC 100 3000
10
```

Figure 13: *Data File*

	id	x_coordinate	y_coordinate	user_id
1	2	3000	3000	17
2	3	100	3000	5
3	4	193.5	190	6
4	5	395	297	7
5	6	596	192	8
6	7	809	297	9
7	8	596	297	10
8	9	1013	192	11
9	10	596	403	14
10	13	0	0	20

Figure 14: *Position Database*

	id	password	last_login	is_superuser	username
1	1	pbkdf2_sha256$870000$1mC7sC77pgWl8R5FoBmP8F$GKTYu6eYkCxsLQXEiuOa/lKfp…	2024-11-26 17:32:15.512513	1	vladi
2	5	pbkdf2_sha256$870000$oYxRJjGKjTFO55SPTSDmXQ$5hLRXYNJUsdHaMieY/CBZFqQI…	<null>	0	ABC
3	6	pbkdf2_sha256$870000$xrf9zsJv30qhLqY4EyBVk1$hXBaPE24YD/SApBtKEq+LKhvP…	<null>	0	ABC1
4	7	pbkdf2_sha256$870000$l5lv9ANwWCNJPlguReSJmC$s5ZltfaNfm5nwb38IFXExHIOL…	2024-10-22 06:09:38.305101	0	HIPPO
5	8	pbkdf2_sha256$870000$SGr9AhsgvzAh8oTCJO77Jj$eTSw04MDGYlKnGJRGlb3yS3hc…	2024-10-18 18:17:21.902912	0	Zebra
6	9	pbkdf2_sha256$870000$RcY4ESy7upYcFwPhR8B7NE$cte8laspc0uD+fIJ9TxxrfJCV…	2024-11-26 08:39:26.799324	0	Red
7	10	pbkdf2_sha256$870000$4rhjDZGL7bSqlFh38oIgqP$oiQ2yxuddTJ1xSAm2WBRaKa9R…	<null>	0	Blue
8	11	pbkdf2_sha256$870000$kyxetbfStHlCgiJI1pCBsh$3w/iVRXYuk2+boMOjs3IO95XV…	<null>	0	Brown
9	14	pbkdf2_sha256$870000$6ntiRyxNfdMBPhycdmnzKC$lYm8t0dTw0Zzxlszfac7vbmmE…	<null>	0	Alex
10	15	pbkdf2_sha256$870000$tbfuLbe7lEaRC6f1ujQekS$VXzF6wyCoHvu0lQhOoa6NYIj/…	<null>	0	Brooklyn

Figure 15: *Authenticated Users Database*

The extra user in the positions database comes from how the software runs. When a new marcher signs up, if their data is not in the data file, then their default coordinates are set to (0, 0) as seen with user “HowdyAgs25”.

4.4 Position Live Feed

4.4.1 Operation

The band field on the front end of the webpage needs to show real time positions of the marchers. A watchdog program was incorporated to check the data file every second for any file changes. When a change occurs (like a user getting a new set of coordinates), the backend iterates through the data file updating the database. While that is occuring, the front end of the field is set to replace all the marchers on the field every 0.7 seconds. The replacing of the dots also allows for any page resizing to occur and not affect the dot location as both the dots and band field get scaled accordingly. While live feed is important, it is also crucial to be able to update the field for any missing/absent marchers. For that, a toggle switch operation was incorporated for all of the marchers. When clicking the “People” button, a catalog of all users populates under the band field and all of the marchers get a toggle switch that can take them on and off the field during the whole live feed process until either the page is refreshed or the use toggle’s back on the marcher.

4.4.2 Validation

To validate the file changes being appropriately updated on the band field, a change to the data file was made for a user to see if their position changes accordingly. Figure 16 is the reference position and Figure 17 is the position after the data file has been changed. The marcher was intended to move from the bottom right (in the endzone) to the 30.5 yard line and this is accurate based on the figures. By analyzing Figure 11 and Figure 16, by counting the number of marchers, it can be validated that the field displays the proper amount of marchers as expected. For the toggling of the users, different combinations of marchers were toggled on and off the field to see if the toggling operation was accurate. The position of the marcher was also checked for each member toggled to check that the correct user was being toggled off the page. Figure 18 is the band field when the user “HowdyAgs25” (in the top left corner) is toggled off.

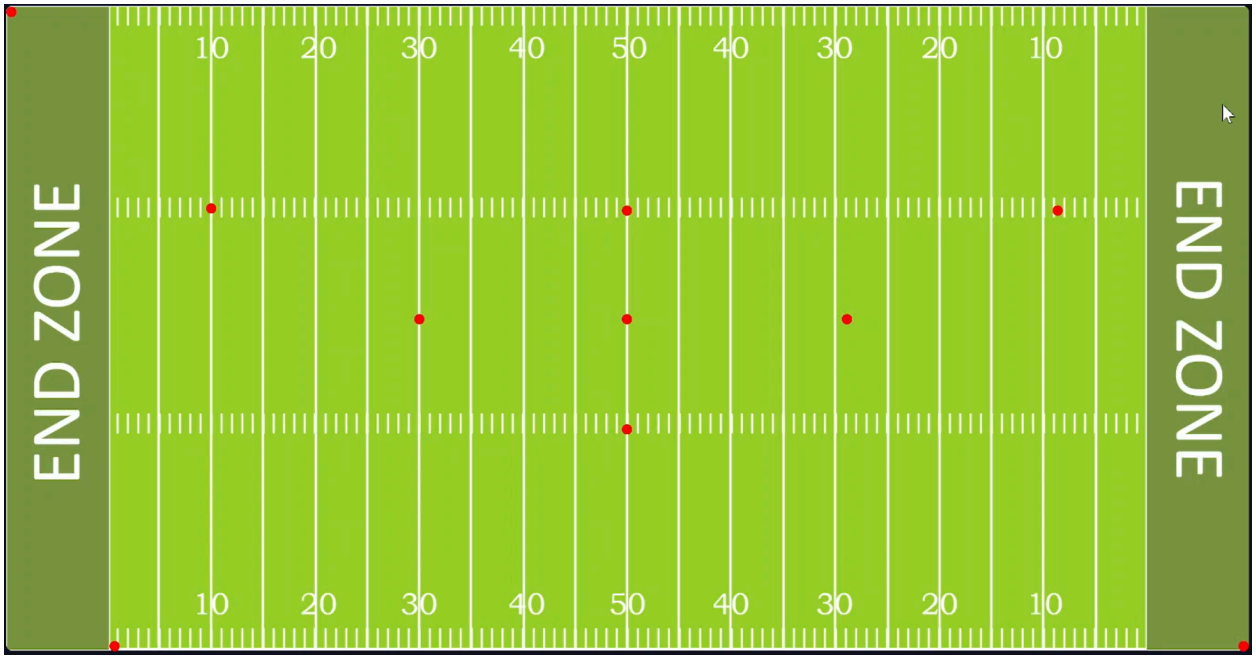

Figure 16: *Reference Band Field*

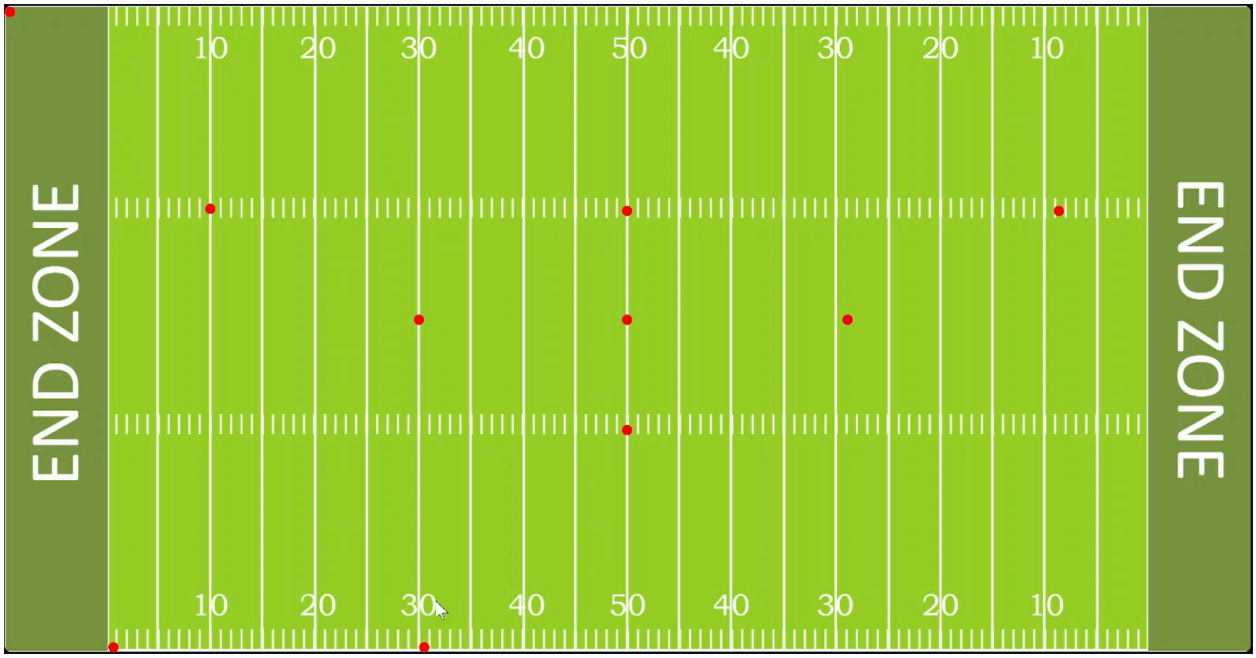

Figure 17: *Band Field with Moved Position*

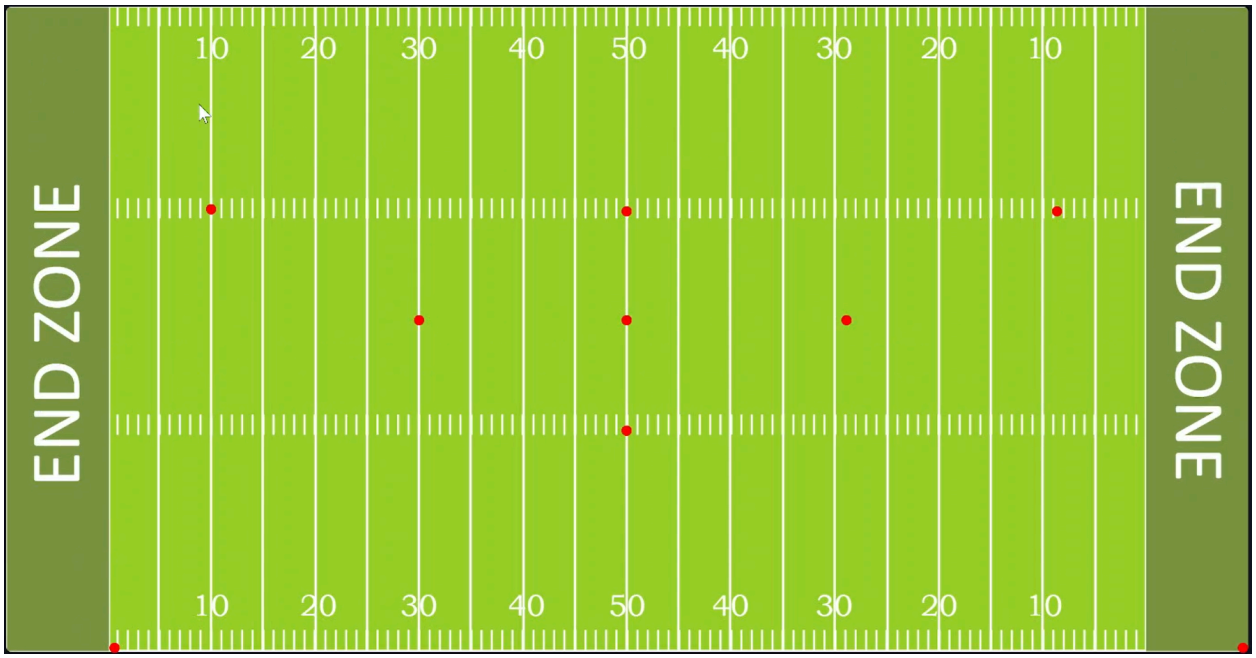

Figure 18: *Band Field Without "HowdyAgs25" Marcher*

4.5 Performance Recordings

4.5.1 Operation

Checking precision against other performances is vital to assess any improvements being made and further corrections to take place. For that, a recording function was implemented onto the webpage. While the function of creating recordings is limited to only

the directors, all users are able to access the recordings. Recordings are limited to 60 seconds and to have a maximum of 10 different runs before they begin to overwrite the oldest attempt. Once a user goes to the recordings page, they are allowed to select two recordings to overlay where red marchers will symbolize the positions of the 1st recording and blue marchers will symbolize the positions of the 2nd recording. The users also get the same toggle operation as described in the live feed.

4.5.2 Validation

To validate the 60 second recording length, the coordinate array for x-coordinates was set in a document. For this specific recording each user had a different coordinate value therefore by parsing the data into lines where each line has only 1 coordinate for every user, the result ended in 56 lines as seen in Figure 19. This result reveals that within the 60 second recording, there is approximately 4 seconds of delay accumulated from the code executing.

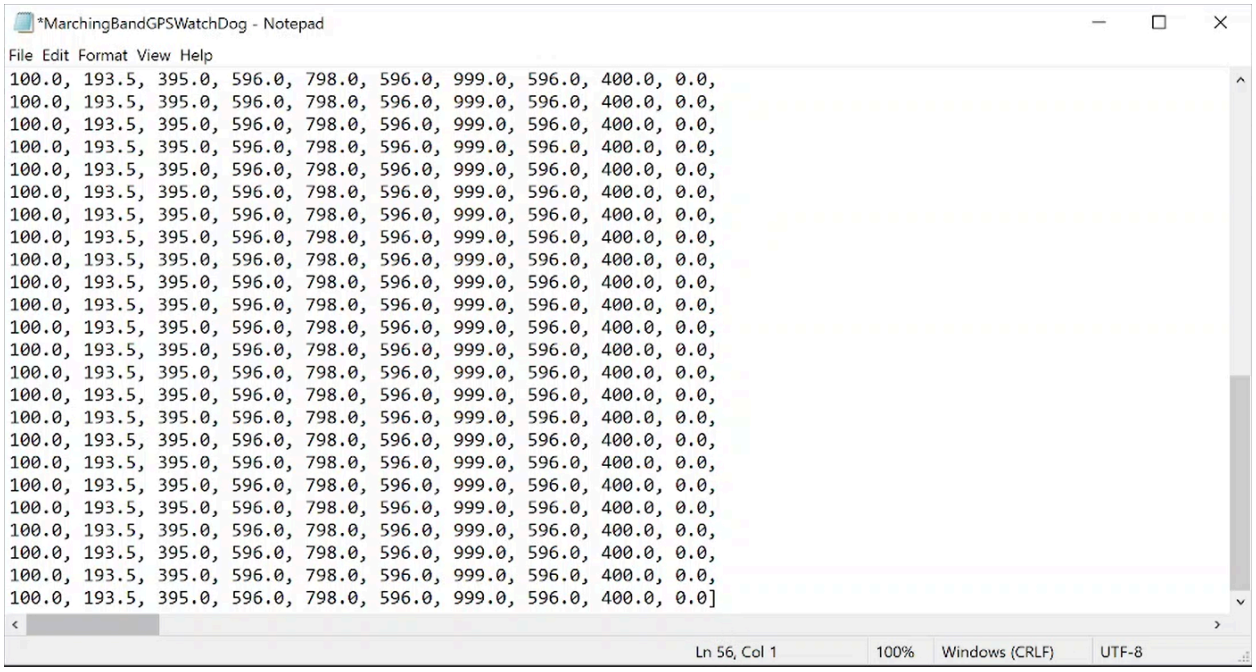

Figure 19: *Recordings Document Parsing*

To validate that there is a maximum of 10 recordings possible, the recording's database was examined to ensure that a maximum of 10 recordings are made. Figure 20 is the recordings database before the next recording began.The oldest recording is always at the top of the database so in terms of Figure 20, the oldest recording attempt is Attempt 9. It is then expected that Attempt 9 will be the next recording created making it jump to the bottom of the database with a new id that is an increment of one above the newest attempt (39) making Attempt 10 the new oldest recording which is what occurs in Figure 21. It can be noted that the id is not rewritten which limits the amount of total attempts possible. The id is able to reach 2147483647 (from $2^{32}/2 - 1$) before issues occur since the database has a signed 32-bit integer size. This maximum value is acceptable for this design because it is not a realistic number of recordings for directors.

WHERE ORDER BY

	id	Attempt	AttemptX_Coordinates	AttemptY_Coordinates	timestamp	recording
1	29	9	[1222.0, 1493.0, 266.0, 243.0, 704.0, 560.0, 988.0, 30…	[600.0, 200.0, 366.0, 250.0, 400.0, 350.0, 500.0, 300.…	2024-11-18 15:44:08.620685	1
2	30	10	[1222.0, 1493.0, 266.0, 243.0, 704.0, 560.0, 988.0, 30…	[600.0, 200.0, 366.0, 250.0, 400.0, 350.0, 500.0, 300.…	2024-11-18 15:44:18.999117	1
3	31	1	[1222.0, 1493.0, 266.0, 243.0, 704.0, 560.0, 988.0, 30…	[600.0, 200.0, 366.0, 250.0, 400.0, 350.0, 500.0, 300.…	2024-11-18 15:44:28.171561	1
4	32	2	[]	[]	2024-11-19 03:00:55.136764	0
5	33	3	[100.0, 150.0, 200.0, 250.0, 300.0, 350.0, 400.0, 450.…	[100.0, 150.0, 200.0, 250.0, 300.0, 350.0, 400.0, 450.…	2024-11-19 03:04:27.315882	1
6	34	4	[1000.0, 950.0, 900.0, 850.0, 800.0, 750.0, 700.0, 650…	[1000.0, 950.0, 900.0, 850.0, 800.0, 750.0, 700.0, 650…	2024-11-19 03:23:28.934021	1
7	35	5	[1222.0, 1493.0, 266.0, 243.0, 704.0, 560.0, 988.0, 30…	[600.0, 200.0, 366.0, 250.0, 400.0, 350.0, 500.0, 300.…	2024-11-19 03:23:32.415115	1
8	36	6	[3000.0, 193.5, 395.0, 596.0, 809.0, 596.0, 1013.0, 59…	[3000.0, 190.0, 297.0, 192.0, 297.0, 297.0, 192.0, 403…	2024-11-23 21:29:16.548295	1
9	37	7	[100.0, 193.5, 395.0, 596.0, 798.0, 596.0, 999.0, 596.…	[3000.0, 190.0, 297.0, 190.0, 297.0, 297.0, 190.0, 399…	2024-11-26 17:08:46.052008	1
10	38	8	[100.0, 193.5, 395.0, 596.0, 798.0, 596.0, 999.0, 596.…	[3000.0, 190.0, 297.0, 190.0, 297.0, 297.0, 190.0, 399…	2024-11-26 17:11:40.832930	1

Figure 20: *Recording's Database Before New Recording*

	id	Attempt	AttemptX_Coordinates	AttemptY_Coordinates	timestamp	recording
1	30	10	[1222.0, 1493.0, 266.0, 243.0, 704.0, 560.0, 988.0, 30…	[600.0, 200.0, 366.0, 250.0, 400.0, 350.0, 500.0, 300.…	2024-11-18 15:44:18.999117	1
2	31	1	[1222.0, 1493.0, 266.0, 243.0, 704.0, 560.0, 988.0, 30…	[600.0, 200.0, 366.0, 250.0, 400.0, 350.0, 500.0, 300.…	2024-11-18 15:44:28.171561	1
3	32	2	[]	[]	2024-11-19 03:00:55.136764	0
4	33	3	[100.0, 150.0, 200.0, 250.0, 300.0, 350.0, 400.0, 450.…	[100.0, 150.0, 200.0, 250.0, 300.0, 350.0, 400.0, 450.…	2024-11-19 03:04:27.315882	1
5	34	4	[1000.0, 950.0, 900.0, 850.0, 800.0, 750.0, 700.0, 650…	[1000.0, 950.0, 900.0, 850.0, 800.0, 750.0, 700.0, 650…	2024-11-19 03:23:28.934021	1
6	35	5	[1222.0, 1493.0, 266.0, 243.0, 704.0, 560.0, 988.0, 30…	[600.0, 200.0, 366.0, 250.0, 400.0, 350.0, 500.0, 300.…	2024-11-19 03:23:32.415115	1
7	36	6	[3000.0, 193.5, 395.0, 596.0, 809.0, 596.0, 1013.0, 59…	[3000.0, 190.0, 297.0, 192.0, 297.0, 297.0, 192.0, 403…	2024-11-23 21:29:16.548295	1
8	37	7	[100.0, 193.5, 395.0, 596.0, 798.0, 596.0, 999.0, 596.…	[3000.0, 190.0, 297.0, 190.0, 297.0, 297.0, 190.0, 399…	2024-11-26 17:08:46.052008	1
9	38	8	[100.0, 193.5, 395.0, 596.0, 798.0, 596.0, 999.0, 596.0, 400.0, 0.0, 100.0, 193.5, 395.0, 596.0, 798.0, 596.0, 999.0, 596.0, 400.0, 0.0, 100.0, 193.5, 395.0, 59			
10	39	9	[100.0, 193.5, 395.0, 596.0, 798.0, 596.0, 999.0, 596.…	[3000.0, 190.0, 297.0, 190.0, 297.0, 297.0, 190.0, 399…	2024-11-26 17:18:47.012526	1

Figure 21: *Recording's Database After New Recording*

The toggle operation was also validated by testing different combinations of marchers to toggle on and off the band field. By toggle a marcher off, their position should be hidden on the field for both the first and second attempts that are being overlaid. Figure 22 reveals the overlay for attempts 3 and 4 where all the marchers are toggled on. Figure 23 is the overlay for the same attempts but with marcher "ABC" from Figure 15 toggled off. The marcher was also checked that was the proper user that was being toggled off.

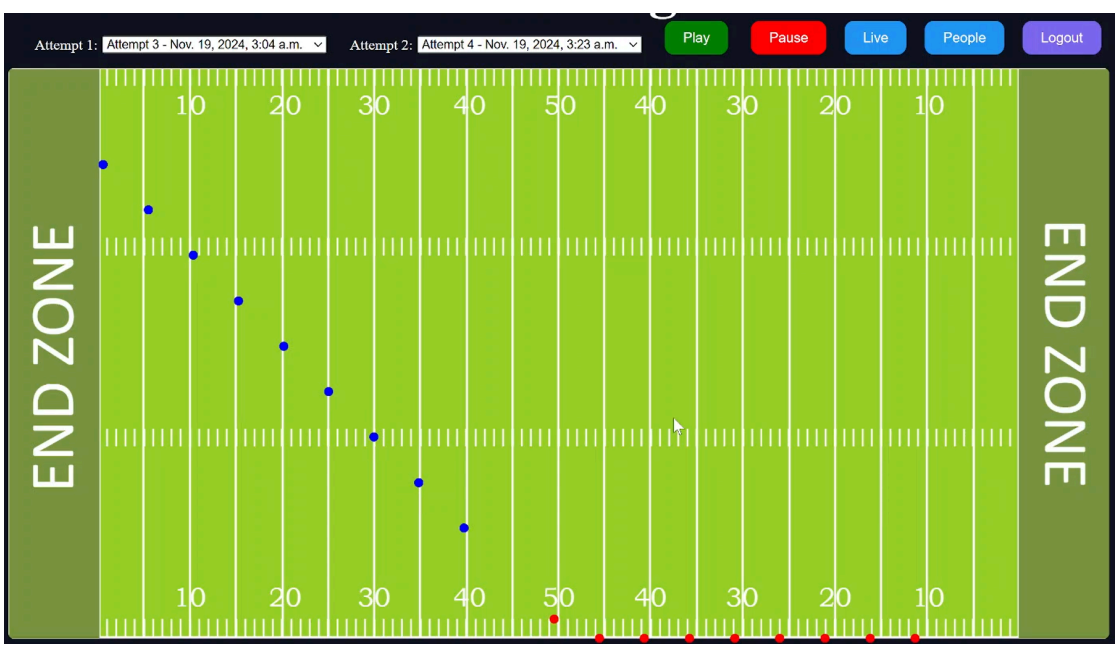

Figure 22: *Recording Overlay With All Marchers*

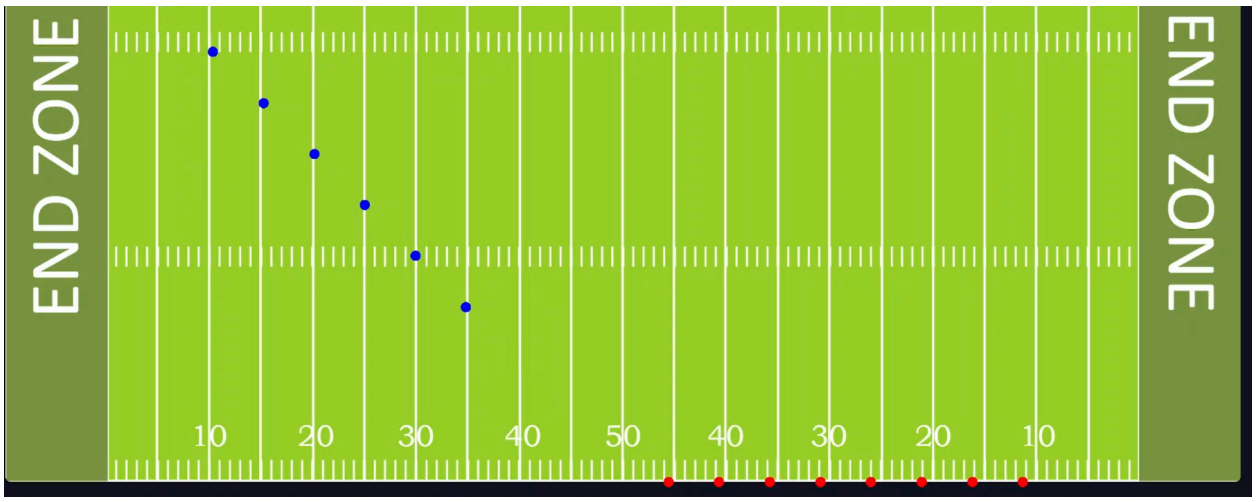

Figure 23: *Recording Overlay With Marcher "ABC" Toggled Off*

4.6 Networking Through Wi-Fi

4.6.1 Operation

To receive data through Wi-Fi from the receiver, the webpage must be able to connect to Wi-Fi. An iPhone hosted a Wi-Fi hotspot and the laptop with the python webpage code connected to it. Then through networking, the iPhone was able to open the webpage when the code was run on the local hotspot IP server. This is a leading step for integration for the following semester to connect the receiver to receive the data file.

4.6.2 Validation

The connection was validated because instead of running the program on a local server it was run through a local network. This is seen in the urls in Figure 24. The laptop's url was connected to a local Wi-Fi network that rejected networking through the network therefore not allowing the iPhone to open the website. But when connecting through the hotspot (the phone's url) the iPhone was able to open up the webpage validating that the networking was working properly. Another confirmation was the get request ""GET / HTTP/1.1" 200 15037" in the command prompt which decodes to meaning that the iPhone is requesting data from the server, 200 meaning that the request was successful, and 15037 for the byte size that the iPhone is receiving.

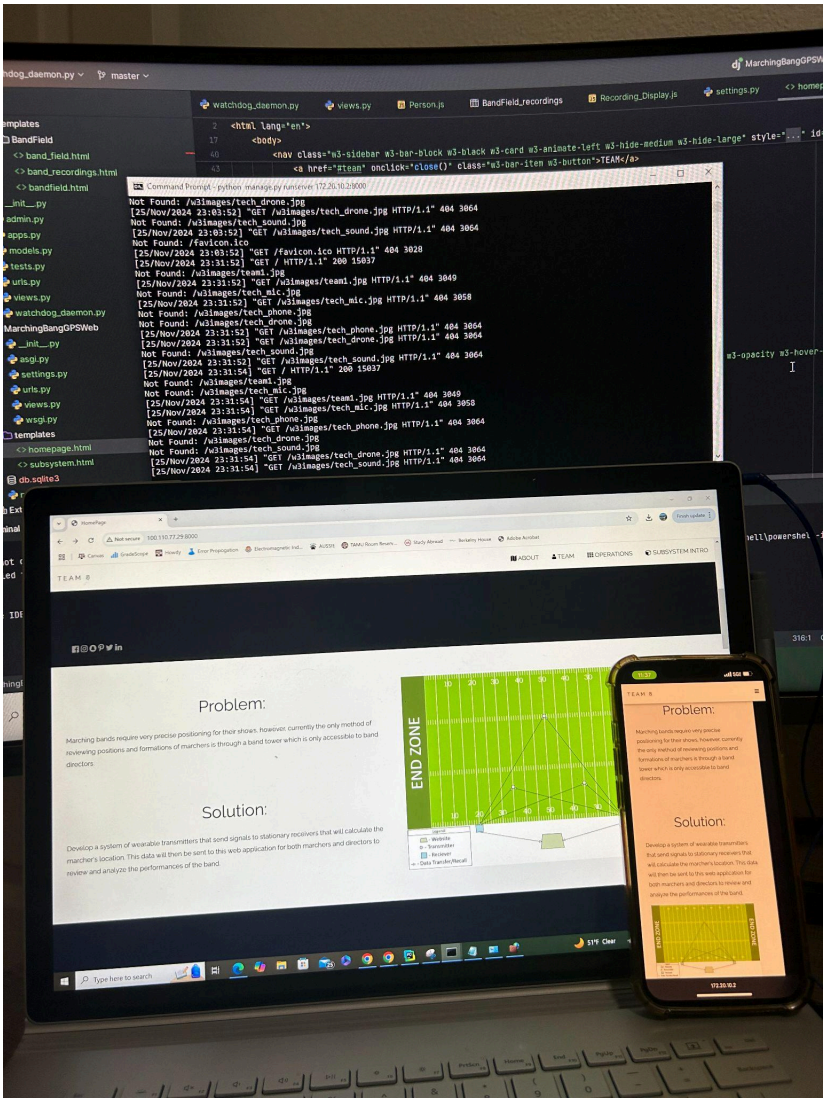

Figure 24: *Wi-Fi Connection*

Marching Band LPS

Alex Flores
Vlad Lebedev

Integrated System Report

INTEGRATED SYSTEM REPORT
FOR
Marching Band LPS

PREPARED BY:

_____
Alex Flores Date

APPROVED BY:

_____
Alex Flores Date

_____
Prof. J. Lusher Date

_____
Vishwam Raval Date

Change Record

Rev.	Date	Originator	Approvals	Description
1	4/28/2025	Alex Flores		Draft Release

Table of Contents

Table of Contents.....73
List of Figures.....74
List of Tables.....75
1. Introduction.....76
2. Subsystem Changes.....76
2.1 Hardware Subsystem.....76
2.2 Firmware Subsystem.....77
2.3 Website Subsystem.....77
3. Validation.....78
3.1 Functional/Performance Requirements.....78
3.1.1 Location Precision.....78
3.1.2 Range of Detection.....79
3.1.3 Website Data Processing Time.....80
3.1.4 Website Connection.....80
3.2 Physical Characteristics.....81
3.2.1 Mass.....81
3.2.2 Volume Envelope.....82
3.2.3 Receiver Mounting.....82
3.2.4 Thermal.....83
3.3 Electrical Characteristics.....83
3.3.1 Power Consumption.....83
3.3.2 Voltage Input.....83
4. Webpage Subsystem Report.....59
4.1 Subsystem Introduction.....59

List of Figures

Figure 1. New Board Design with Battery Pack……..……...76
Figure 2. Old Anchor Layout (Left) vs New (Right)…… 77
Figure 3. Range Testing……..…… 79
Figure 4. Processing Time……...80
Figure 5. Microcontroller Wi-Fi Connection……...……81
Figure 6. Hardware on Scale…….…….…… 81
Figure 7. Casing Being Worn and Mounted……...…….…… 82
Figure 8. Oscilloscope Results……..…… 84
Figure 9. Buck-Boost Converter Results for Input Voltage Range…..…… 84

List of Tables

Table 1. Accuracy Test 1……..……...78
Table 2. Accuracy Test 2……..……...78

1. Introduction

For the integrated system to be complete, the firmware code had to be flashed to the circuit boards and then tested to confirm the position calculation without sending this data to the website. After this was tested and validated, data communication between the hardware and the website was implemented and tested, thus completing system integration. Additionally, the physical components of the hardware were implemented, meaning a casing was designed and 3D printed which allowed other physical attributes to be tested.

2. Subsystem Changes

2.1 Hardware Subsystem

Design changes were made to the printed circuit board that would ensure more reliable voltage at 3.3 V to be delivered to the maUWB module and the ESP32. This consisted of adjustments being made to resistor values on the original board design such that the implemented buck-boost converter could properly output the desired voltage.

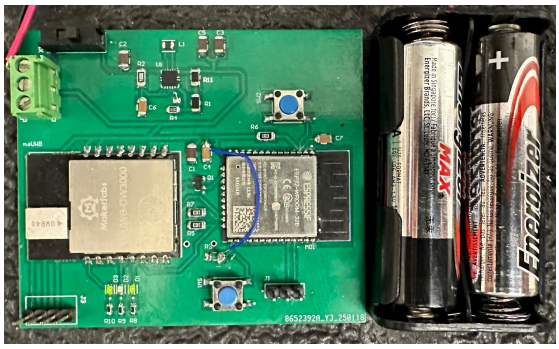

Figure 1: *New Board Design with Battery Pack*

Additionally, the decision to increase the number of anchors from 2 to 3 was made. This was brought up early in the semester after more research was done into the process of trilateration, where, to provide accurate data through these calculations, 3 anchors would be needed to properly perform trilateration calculations.

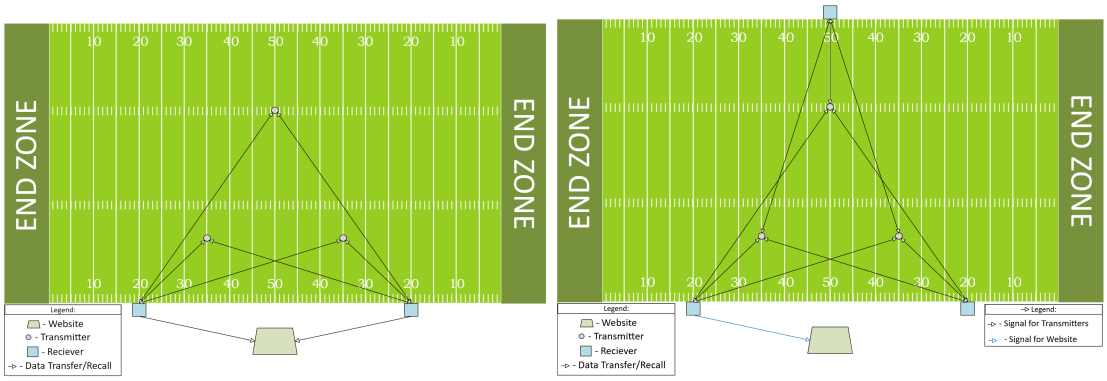

Figure 2: *Old Anchor Layout (Left) vs New (Right)*

2.2 Firmware Subsystem

The largest subsystem change came from the firmware subsystem. As mentioned in the subsystem report earlier in this document, the project originally began last semester with 3 group members. The third group member was in charge of developing the firmware for this system, so when he left the course it was then left to the remaining two group members to develop this subsystem.

While it was originally planned to complete this subsystem with C++ coding with limited libraries, a pivot to Arduino was made, which allowed the utilization of the support and robustness of the numerous Arduino libraries available. Additionally, the use of the manufacturer of the maUWB module's sample code for basic functionality was utilized while still adding onto it to enable W-iFi communication between the firmware and the website and the position calculations.

2.3 Website Subsystem

The original website design consisted of a watchdog function whose purpose was to check the data file that the microcontroller was uploading to the backend of the website for any changes. When changes were made to the file, watchdog would update the database that consisted of the marcher's x and y-coordinates. With the use of Arduino, the use of the watchdog function was no longer required. This is because the new design with Arduino allows for the microcontroller to communicate with a website backend function directly. Therefore, instead of uploading a file to the backend of the website and having a watchdog observe for any changes to update the database, the microcontroller communicates with a backend function that splits the data and updates the position's database accordingly.

3. Validation

3.1. Functional / Performance Requirements

3.1.1. Location Precision

To fulfill the requirements for the precision of the Marching Band LPS system, recorded position values of the tag had to stay within one meter of the actual position during operation. Another goal was to attempt to maintain a percent error below 5% during operation. These tests were performed using the centimeter values calculated and output by the ESP32 before being sent to the website.

This test was performed on two different occasions to measure the effectiveness of the system while in close range and to test at long range. For the first, the anchors were set up about 10 yards apart in the usual triangle formation and accuracy was tested with results shown in Table 1.

	X Value	Y Value			Percent Error X	Percent Error Y
Position 1 Physical	579	365	(19 ft, 12 ft)	Position 1	3.972366149	2.739726027
Position 1 LPS	602	355		Position 2	2.0888014	4.753433209
Position 2 Physical	182.88	320.4	(5 ft, 10.5 ft)			
Position 2 LPS	179.06	335.63				

Table 1: *Accuracy Test 1*

Values were taken at the start position and at the end position of a movement of about 5 yards. From these values, it was found that percent error in both the x-axis and the y-axis was below 5% for both positions and was less than a meter off of the actual value.

The next test was performed on a full scale, 100 m x 50 m field. Anchors were set up approximately 40 meters apart in the triangular positioning, similar to what would be expected when operating the system in practice. Similar to the last test, a person holding the tag moved and their beginning and end position were recorded from what was calculated by the system and where the tag physically was with results shown in Table 2.

	X Value	Y Value			Percent Error X	Percent Error Y
Position 1 Physical	3657.6	131.55	(30 yd, 1.5 yd)	Position 1	3.63653762	4.561003421
Position 1 LPS	3790.61	137.55		Position 2	2.380952381	4.160591037
Position 2 Physical	3840.48	2057.4	42 yd, 22.5 yd)			
Position 2 LPS	3931.92	1971.8				

Table 2: *Accuracy Test 2*

With this test, the accuracy was slightly lower, but never went above the percent error limit for the design. It seems that as the distance between the tag and the anchor is increased, the accuracy lowers marginally. Another thing that affected the accuracy of the system is a small issue that came from the height of the anchors being about a meter lower than that of the tag. This resulted in about half a meter being added to the range between them due to the z-axis not being considered in the calculations. This error is unlikely to come up when used in actual use when anchors are mounted to speaker stands, where the difference in height between the tag and the anchor has a negligible effect on the range.

3.1.2. Range of Detection

For the system to be functional as a location tracker on a marching band field, it required the system to be able to operate within all areas of a 100 m x 50 m rectangle. To validate this, the tag was walked to all four corners of an area measured out to be 120 yards x 50 yards (the size of a typical football field plus endzones). Then, the position was checked on the website to ensure that it was able to reach the requirements.

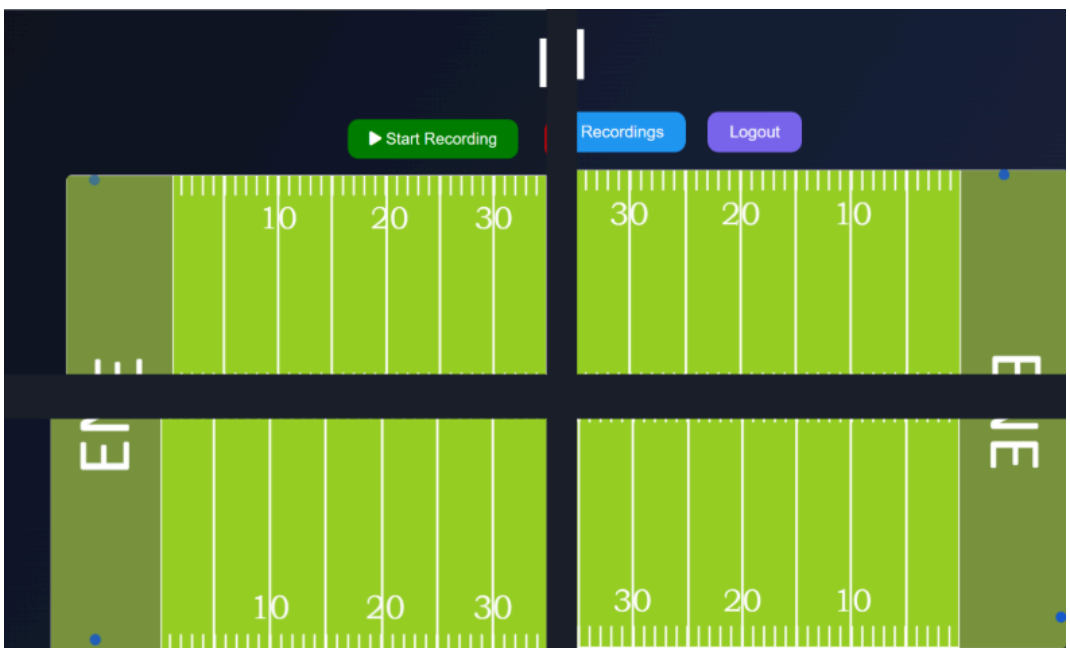

Figure 3: *Range Testing*

In Figure 3, the blue dot is the tag being displayed on the website. The dot is shown to be in the endzone, meaning that the tag is outside of the 100 yd x 50 yd. This shows that the range requirement was exceeded, therefore, validated for this design.

3.1.3. Website Data Process Time

To achieve a live feed with real-time positions of marcher's, the database linked with the website must be updated with the new position every second. This was tested by reviewing the logs in the hosting site's console log. Every time the microcontroller accesses the backend function, the console log will display a "POST" log as seen in Figure 4 since the microcontroller is posting data into the backend.

```
Mar 21 07:58:20 PM  INFO    127.0.0.1 - - [22/Mar/2025:00:58:20 +0000] "POST /BandField/update_positions/ HTTP/1.1" 200 77 "https://marching-band-lps.onrender.com" "ESP32HTTPClient"
Mar 21 07:58:21 PM  INFO    127.0.0.1 - - [22/Mar/2025:00:58:21 +0000] "POST /BandField/update_positions/ HTTP/1.1" 200 77 "https://marching-band-lps.onrender.com" "ESP32HTTPClient"
Mar 21 07:58:22 PM  INFO    127.0.0.1 - - [22/Mar/2025:00:58:22 +0000] "POST /BandField/update_positions/ HTTP/1.1" 200 77 "https://marching-band-lps.onrender.com" "ESP32HTTPClient"
Mar 21 07:58:23 PM  INFO    127.0.0.1 - - [22/Mar/2025:00:58:23 +0000] "POST /BandField/update_positions/ HTTP/1.1" 200 75 "https://marching-band-lps.onrender.com" "ESP32HTTPClient"
Mar 21 07:58:24 PM  INFO    127.0.0.1 - - [22/Mar/2025:00:58:24 +0000] "POST /BandField/update_positions/ HTTP/1.1" 200 77 "https://marching-band-lps.onrender.com" "ESP32HTTPClient"
Mar 21 07:58:25 PM  INFO    127.0.0.1 - - [22/Mar/2025:00:58:25 +0000] "POST /BandField/update_positions/ HTTP/1.1" 200 77 "https://marching-band-lps.onrender.com" "ESP32HTTPClient"
Mar 21 07:58:26 PM  INFO    127.0.0.1 - - [22/Mar/2025:00:58:26 +0000] "POST /BandField/update_positions/ HTTP/1.1" 200 75 "https://marching-band-lps.onrender.com" "ESP32HTTPClient"
Mar 21 07:58:27 PM  INFO    127.0.0.1 - - [22/Mar/2025:00:58:27 +0000] "POST /BandField/update_positions/ HTTP/1.1" 200 75 "https://marching-band-lps.onrender.com" "ESP32HTTPClient"
Mar 21 07:58:28 PM  INFO    127.0.0.1 - - [22/Mar/2025:00:58:28 +0000] "POST /BandField/update_positions/ HTTP/1.1" 200 77 "https://marching-band-lps.onrender.com" "ESP32HTTPClient"
Mar 21 07:58:29 PM  INFO    127.0.0.1 - - [22/Mar/2025:00:58:29 +0000] "POST /BandField/update_positions/ HTTP/1.1" 200 77 "https://marching-band-lps.onrender.com" "ESP32HTTPClient"
Mar 21 07:58:30 PM  INFO    127.0.0.1 - - [22/Mar/2025:00:58:30 +0000] "POST /BandField/update_positions/ HTTP/1.1" 200 77 "https://marching-band-lps.onrender.com" "ESP32HTTPClient"
Mar 21 07:58:31 PM  INFO    127.0.0.1 - - [22/Mar/2025:00:58:31 +0000] "POST /BandField/update_positions/ HTTP/1.1" 200 76 "https://marching-band-lps.onrender.com" "ESP32HTTPClient"
Mar 21 07:58:32 PM  INFO    127.0.0.1 - - [22/Mar/2025:00:58:32 +0000] "POST /BandField/update_positions/ HTTP/1.1" 200 77 "https://marching-band-lps.onrender.com" "ESP32HTTPClient"
Mar 21 07:58:33 PM  INFO    127.0.0.1 - - [22/Mar/2025:00:58:33 +0000] "POST /BandField/update_positions/ HTTP/1.1" 200 76 "https://marching-band-lps.onrender.com" "ESP32HTTPClient"
Mar 21 07:58:34 PM  INFO    127.0.0.1 - - [22/Mar/2025:00:58:34 +0000] "POST /BandField/update_positions/ HTTP/1.1" 200 77 "https://marching-band-lps.onrender.com" "ESP32HTTPClient"
Mar 21 07:58:35 PM  INFO    127.0.0.1 - - [22/Mar/2025:00:58:35 +0000] "POST /BandField/update_positions/ HTTP/1.1" 200 77 "https://marching-band-lps.onrender.com" "ESP32HTTPClient"
Mar 21 07:58:36 PM  INFO    127.0.0.1 - - [22/Mar/2025:00:58:36 +0000] "POST /BandField/update_positions/ HTTP/1.1" 200 77 "https://marching-band-lps.onrender.com" "ESP32HTTPClient"
Mar 21 07:58:37 PM  INFO    127.0.0.1 - - [22/Mar/2025:00:58:37 +0000] "POST /BandField/update_positions/ HTTP/1.1" 200 76 "https://marching-band-lps.onrender.com" "ESP32HTTPClient"
Mar 21 07:58:38 PM  INFO    127.0.0.1 - - [22/Mar/2025:00:58:38 +0000] "POST /BandField/update_positions/ HTTP/1.1" 200 77 "https://marching-band-lps.onrender.com" "ESP32HTTPClient"
Mar 21 07:58:39 PM  INFO    127.0.0.1 - - [22/Mar/2025:00:58:39 +0000] "POST /BandField/update_positions/ HTTP/1.1" 200 77 "https://marching-band-lps.onrender.com" "ESP32HTTPClient"
Mar 21 07:58:39 PM  INFO    127.0.0.1 - - [22/Mar/2025:00:58:39 +0000] "POST /BandField/update_positions/ HTTP/1.1" 200 77 "https://marching-band-lps.onrender.com" "ESP32HTTPClient"
Mar 21 07:58:40 PM  INFO    127.0.0.1 - - [22/Mar/2025:00:58:40 +0000] "POST /BandField/update_positions/ HTTP/1.1" 200 77 "https://marching-band-lps.onrender.com" "ESP32HTTPClient"
Mar 21 07:58:41 PM  INFO    127.0.0.1 - - [22/Mar/2025:00:58:41 +0000] "POST /BandField/update_positions/ HTTP/1.1" 200 77 "https://marching-band-lps.onrender.com" "ESP32HTTPClient"
Mar 21 07:58:42 PM  INFO    127.0.0.1 - - [22/Mar/2025:00:58:42 +0000] "POST /BandField/update_positions/ HTTP/1.1" 200 77 "https://marching-band-lps.onrender.com" "ESP32HTTPClient"
Mar 21 07:58:43 PM  INFO    127.0.0.1 - - [22/Mar/2025:00:58:43 +0000] "POST /BandField/update_positions/ HTTP/1.1" 200 77 "https://marching-band-lps.onrender.com" "ESP32HTTPClient"
Mar 21 07:58:44 PM  INFO    127.0.0.1 - - [22/Mar/2025:00:58:44 +0000] "POST /BandField/update_positions/ HTTP/1.1" 200 77 "https://marching-band-lps.onrender.com" "ESP32HTTPClient"
Mar 21 07:58:45 PM  INFO    127.0.0.1 - - [22/Mar/2025:00:58:45 +0000] "POST /BandField/update_positions/ HTTP/1.1" 200 77 "https://marching-band-lps.onrender.com" "ESP32HTTPClient"
Mar 21 07:58:46 PM  INFO    127.0.0.1 - - [22/Mar/2025:00:58:46 +0000] "POST /BandField/update_positions/ HTTP/1.1" 200 77 "https://marching-band-lps.onrender.com" "ESP32HTTPClient"
Mar 21 07:58:47 PM  INFO    127.0.0.1 - - [22/Mar/2025:00:58:47 +0000] "POST /BandField/update_positions/ HTTP/1.1" 200 76 "https://marching-band-lps.onrender.com" "ESP32HTTPClient"
Mar 21 07:58:48 PM  INFO    127.0.0.1 - - [22/Mar/2025:00:58:48 +0000] "POST /BandField/update_positions/ HTTP/1.1" 200 77 "https://marching-band-lps.onrender.com" "ESP32HTTPClient"
Mar 21 07:58:48 PM  INFO    127.0.0.1 - - [22/Mar/2025:00:58:48 +0000] "POST /BandField/update_positions/ HTTP/1.1" 200 77 "https://marching-band-lps.onrender.com" "ESP32HTTPClient"
Mar 21 07:58:49 PM  INFO    127.0.0.1 - - [22/Mar/2025:00:58:49 +0000] "POST /BandField/update_positions/ HTTP/1.1" 200 77 "https://marching-band-lps.onrender.com" "ESP32HTTPClient"
Mar 21 07:58:50 PM  INFO    127.0.0.1 - - [22/Mar/2025:00:58:50 +0000] "POST /BandField/update_positions/ HTTP/1.1" 200 77 "https://marching-band-lps.onrender.com" "ESP32HTTPClient"
Mar 21 07:58:51 PM  INFO    127.0.0.1 - - [22/Mar/2025:00:58:51 +0000] "POST /BandField/update_positions/ HTTP/1.1" 200 77 "https://marching-band-lps.onrender.com" "ESP32HTTPClient"
Mar 21 07:58:52 PM  INFO    127.0.0.1 - - [22/Mar/2025:00:58:52 +0000] "POST /BandField/update_positions/ HTTP/1.1" 200 77 "https://marching-band-lps.onrender.com" "ESP32HTTPClient"
Mar 21 07:58:53 PM  INFO    127.0.0.1 - - [22/Mar/2025:00:58:53 +0000] "POST /BandField/update_positions/ HTTP/1.1" 200 77 "https://marching-band-lps.onrender.com" "ESP32HTTPClient"
Mar 21 07:58:54 PM  INFO    127.0.0.1 - - [22/Mar/2025:00:58:54 +0000] "POST /BandField/update_positions/ HTTP/1.1" 200 77 "https://marching-band-lps.onrender.com" "ESP32HTTPClient"
Mar 21 07:58:55 PM  INFO    127.0.0.1 - - [22/Mar/2025:00:58:55 +0000] "POST /BandField/update_positions/ HTTP/1.1" 200 77 "https://marching-band-lps.onrender.com" "ESP32HTTPClient"
Mar 21 07:58:56 PM  INFO    127.0.0.1 - - [22/Mar/2025:00:58:56 +0000] "POST /BandField/update_positions/ HTTP/1.1" 200 77 "https://marching-band-lps.onrender.com" "ESP32HTTPClient"
Mar 21 07:58:57 PM  INFO    127.0.0.1 - - [22/Mar/2025:00:58:57 +0000] "POST /BandField/update_positions/ HTTP/1.1" 200 77 "https://marching-band-lps.onrender.com" "ESP32HTTPClient"
Mar 21 07:58:57 PM  INFO    127.0.0.1 - - [22/Mar/2025:00:58:57 +0000] "POST /BandField/update_positions/ HTTP/1.1" 200 77 "https://marching-band-lps.onrender.com" "ESP32HTTPClient"
Mar 21 07:58:58 PM  INFO    127.0.0.1 - - [22/Mar/2025:00:58:58 +0000] "POST /BandField/update_positions/ HTTP/1.1" 200 77 "https://marching-band-lps.onrender.com" "ESP32HTTPClient"
Mar 21 07:58:59 PM  INFO    127.0.0.1 - - [22/Mar/2025:00:58:59 +0000] "POST /BandField/update_positions/ HTTP/1.1" 200 77 "https://marching-band-lps.onrender.com" "ESP32HTTPClient"
Mar 21 07:59:00 PM  INFO    127.0.0.1 - - [22/Mar/2025:00:59:00 +0000] "POST /BandField/update_positions/ HTTP/1.1" 200 77 "https://marching-band-lps.onrender.com" "ESP32HTTPClient"
Mar 21 07:59:01 PM  INFO    127.0.0.1 - - [22/Mar/2025:00:59:01 +0000] "POST /BandField/update_positions/ HTTP/1.1" 200 77 "https://marching-band-lps.onrender.com" "ESP32HTTPClient"
Mar 21 07:59:02 PM  INFO    127.0.0.1 - - [22/Mar/2025:00:59:02 +0000] "POST /BandField/update_positions/ HTTP/1.1" 200 77 "https://marching-band-lps.onrender.com" "ESP32HTTPClient"
Mar 21 07:59:03 PM  INFO    127.0.0.1 - - [22/Mar/2025:00:59:03 +0000] "POST /BandField/update_positions/ HTTP/1.1" 200 77 "https://marching-band-lps.onrender.com" "ESP32HTTPClient"
Mar 21 07:59:04 PM  INFO    127.0.0.1 - - [22/Mar/2025:00:59:04 +0000] "POST /BandField/update_positions/ HTTP/1.1" 200 77 "https://marching-band-lps.onrender.com" "ESP32HTTPClient"
Mar 21 07:59:05 PM  INFO    127.0.0.1 - - [22/Mar/2025:00:59:05 +0000] "POST /BandField/update_positions/ HTTP/1.1" 200 77 "https://marching-band-lps.onrender.com" "ESP32HTTPClient"
Mar 21 07:59:06 PM  INFO    127.0.0.1 - - [22/Mar/2025:00:59:06 +0000] "POST /BandField/update_positions/ HTTP/1.1" 200 77 "https://marching-band-lps.onrender.com" "ESP32HTTPClient"
Mar 21 07:59:07 PM  INFO    127.0.0.1 - - [22/Mar/2025:00:59:07 +0000] "POST /BandField/update_positions/ HTTP/1.1" 200 77 "https://marching-band-lps.onrender.com" "ESP32HTTPClient"
```

Figure 4: *Processing Time*

Under ideal Wi-Fi conditions where the microcontroller is able to access a strong Wi-Fi connection, there were 50 logs in 47 seconds seen in Figure 4 which exceeded the required value of 50 logs in 50 seconds.

3.1.4. Website Connection

For this design, the microcontroller's were designed to connect to Wi-Fi for sending the website marchers' coordinates. This was first validated by coding the microcontroller to

output a successful connection message in the serial terminal which occurred in Figure 5 and was validated by the website receiving successful “POST” logs as seen in Figure 4.

```
..........
Wi-Fi is not connecting, please wait.

..........
Wi-Fi is not connecting, please wait.

.......
 ESP32 is starting...
Initializing UWB sensor...
UWB sensor initialized!
Connecting to Wi-Fi...
...
Wi-Fi connected!
```

Figure 5: *Microcontroller Wi-Fi Connection*

3.2. Physical Characteristics

3.2.1. Mass

To not affect marchers, requirements were made to keep the total mass of the hardware, including the casing, the circuit board, and the battery pack, below 1 kg. Below in Figure 6, it is seen that the total package comes out to be 0.38 lbs (0.17 kg), which is much less than the 1 kg limit that was outlined by the project sponsor.

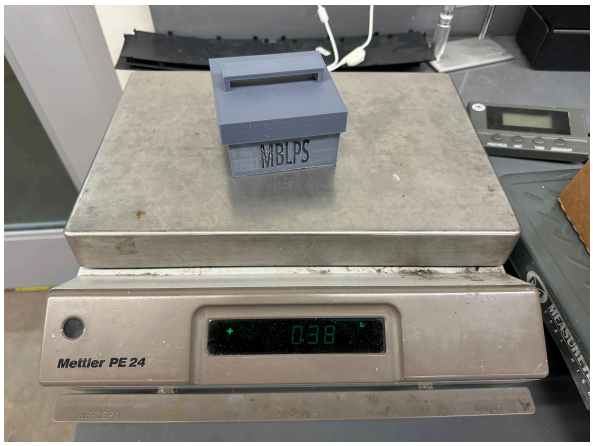

Figure 6: *Hardware on Scale*

3.2.2. Volume Envelope

To fit within the sponsor's maximum requirements for volume of 80 mm x 80 mm x 160 mm, the casing was designed to to be sized at 80 mm x 40 mm x 80 mm, making it less than half than what was requested. This was validated by examining the design within the 3D modelling software that was used to design the casing and ensured that it fit within the requirements. Additionally, it was manually measured after it was printed to ensure it was the correct size.

3.2.3. Receiver Mounting

To facilitate the wearing of the tag and the mounting of the anchors, the casing design had to be wearable by the marcher and be able to be mounted to a pole. Below in Figure 7, it can be seen being worn by a person and mounted to a pole.

Figure 7: *Casing Being Worn and Mounted*

To test comfortability while being worn and to ensure it would not slip off, the casing was walked around while being worn for a minute. It stayed steady and comfortable for the wearer, passing that half of validation. Next, it was tested to stay stable while it was mounted to a pole. To validate this, the pole was shaken while it was mounted and the hardware remained stable and did not slip off of the pole.

3.2.4. Thermal

To test thermal capabilities of the hardware design, the board was placed inside of an oven set at 120 degrees fahrenheit and monitored to ensure that it continued operation under this condition. After it was validated that it could withstand the high end temperature, it was then placed inside of a freezer to test the lower end of the thermal limit. The board remained there for thirty minutes before it was removed and its operation was confirmed.

An informal test was also performed while performing the system's full scale testing in the form of the boards being able to continue operating in 90 degree weather conditions and outlast an iPhone, which overheated and shut down in the middle of testing.

3.3. Electrical Characteristics

3.3.1. Power Consumption

The power consumption limitation was set to be under 2 Watt-hours for the peak of operation of the system. Taking into account that the high end of ESP32 operation under active WiFi has a draw of 240 milliampere-hours, the maUWB module having a draw of 75 milliampere-hours, and the required voltage being 3.3 Volts, the power consumption comes out to be 1.04 Watt-hours. Additionally, it was noted that the system can operate off of 2x AA batteries for a little over 5 hours of operation, which was considered to be exceeding the desires of the sponsor who expected it to run for 2-3 hour for every two batteries

3.3.2. Voltage Input

While the input voltage was tested and validated last semester, the power system had been redesigned for reliability, so it was tested again to ensure that operation was still at the expected level of 3.3 V for any input voltage between 1.8 V and 3.3 V.

First, the power system was tested for optimal conditions, that being two fresh AA batteries that would provide 1.5 V each for a total of 3 V. With this, the output of the power system was tested and found to be a steady 3.3 V, which was monitored on an oscilloscope. A screenshot of this oscilloscope's display can be seen in Figure 8 below.

Figure 8: *Oscilloscope Results*

With optimal conditions being tested and validated, the system was then tested for every expected input voltage between 1.8 V and 3.2 V using a DC power supply, with a step size of 0.1 V between each input. This test showed that for any input voltage, the output voltage remained at 3.3 V, which can be seen below in Figure 9.

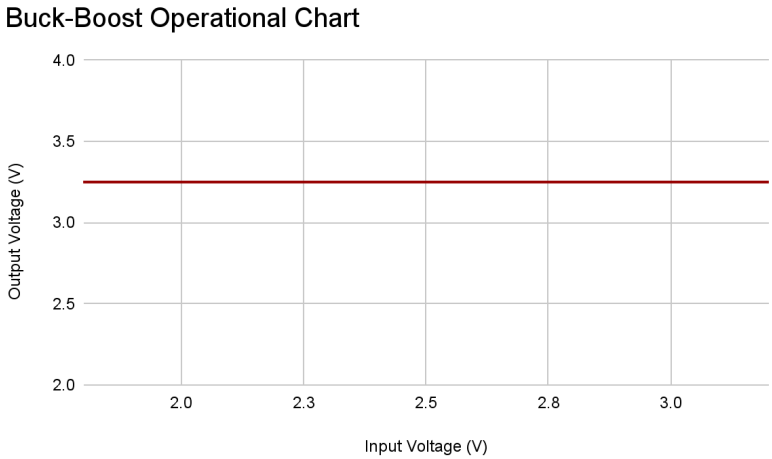

Figure 9: *Buck-Boost Converter Results for Input Voltage Range*

With these tests completed, the new power system design was validated and shown to operate with the same consistency as the previous design, but now with a constant output of 3.3 V rather than 3.25 V.

Marching Band LPS

Alex Flores
Vlad Lebedev

Schedule and Validation

Milestone Schedule:

Items	Owner	1/27/25	2/3/25	2/10/25	2/17/25	2/24/25	3/3/25	3/10/25	3/17/25	3/24/25	3/31/25	4/7/25	4/14/25	4/21/25	4/28/25
Redesign Board and Order New Parts and Board	Alex														
Bi-Weekly Update #1	Both														
Use Arduino to Create Firmware	Vlad														
Finalize Arduino Details	Both														
Solder New Boards and Test	Alex														
Test Arduino Code Implementation	Alex														
Bi-Weekly Update #2	Both														
Make Changes to Code for Hardware Implementation	Alex														
Finalize Website Subsystem	Vlad														
Bi-Weekly Update #3	Both														
Test Website Connectivity	Vlad														
Finalize Integration	Both														
Test Range of Detection	Both														
Test Precision of Detection	Both														
Spring Break (If needed, catch up if behind)	Both														
Bi-Weekly Update #4	Both														
Participate in Design Blitz	Both														
Implement Design Changes if Needed	Both														
Bi-Weekly Update #5	Both														
Work on Physical Casing	Alex														
Test Physical Properties (Thermal, Weight, etc)	Alex														
Final Presentation	Both														
Final Demo	Both														
Final Report	Both														

Not Started
In Progress
Completed
Behind Schedule

Validation Plan:

Paragraph #	Test Name	Success Criteria	Methodology	Status	Owner(s)
3.2.1.1	Location Precision	The Marching Band LPS will be able to provide the location of each marcher with an accuracy of +/- 1 meter.	Establish reference points with known positions and compare LPS data to calculate the precision error.	Tested: Success. Tag was walked around and then its transmitted x and y were compared against real x and y	Full Team
3.2.1.2	Range of Detection	The Marching Band LPS will be able to detect marchers within a football field with the dimensions of 100 meters by 50 meters.	Move around a transmitter at the edges of the football field to ensure stable connection.	Tested: Tag was walked across field and maintained transmission at all four corners.	Full Team
3.2.1.3	Website Data Process Time	Location data will be processed and displayed on the website associated with the Marching Band LPS in one second or less.	Add a timer on the display and count the time it takes to process 50 location coordinates.	Tested: Success. Connected to website and confirmed over 50 data logs in under 50 seconds (47 seconds)	Full Team
3.2.1.4	Website Connection	The website will connect through WiFi to the receivers.	Be able to network through a local connection like a hotspot from one device on the python project.	Tested: Success. Connected to WiFi and displayed successul connection message	Vlad Lebedev
3.2.2.1	Mass	The total mass of the PCB and additional hardware will not exceed 1kg.	Measure mass of the hardware with a digital scale.	Tested: Success. The total mass weighed in at 0.0635 kg.	Alex Flores
3.2.2.2	Volume Envelope	The housing unit for the PCB will not exceed the dimensions of 80 x 80 x 160 mm.	Perform measurements on the hardware to ensure it fits into specified dimensions	Tested: Success. The dimensions measured are 80 x 40 x 80 mm.	Full Team
3.2.2.3	Receiver Mounting	The receiver can be mounted onto a pole similar in scale to that of a speaker stand. The transmitter can be mounted comfortable onto a person	The receiver will be mounted onto a stand and shaken lightly to ensure stability. The transmitter will be worn by and individual who will move to test comfortability	Tested: Success. Casing was mounted to a PVC pipe and shaken to ensure stability and was mounted to a person to ensure comfort	Full Team
3.2.3.1.1	Power Consumption	The maximum peak power of the system shall not exceed 2 watt hours	Use mulitmeter to validate watt hours for the device	Tested: Success. Totally draw required is 0.78 Wh when adding up current draw from various parts	Alex Flores
3.2.3.1.2	Input Voltage Level	The input voltage level for the Marching Band LPS shall be within 3.0V-3.5V.	Use mulitmeter to validate input voltage levels	Tested: Success. Output is 3.25V	Alex Flores
3.2.4.2	Thermal	The system should be operational in environments that have temperatures within the range of 10°F and 120°F	System will be placed in a heating device and cooling device and be monitored to guarantee operation in the respective conditions.	Tested: Success. Heat was simulated by an oven. Cooling was simulated by being placed in a freezer	Alex Flores