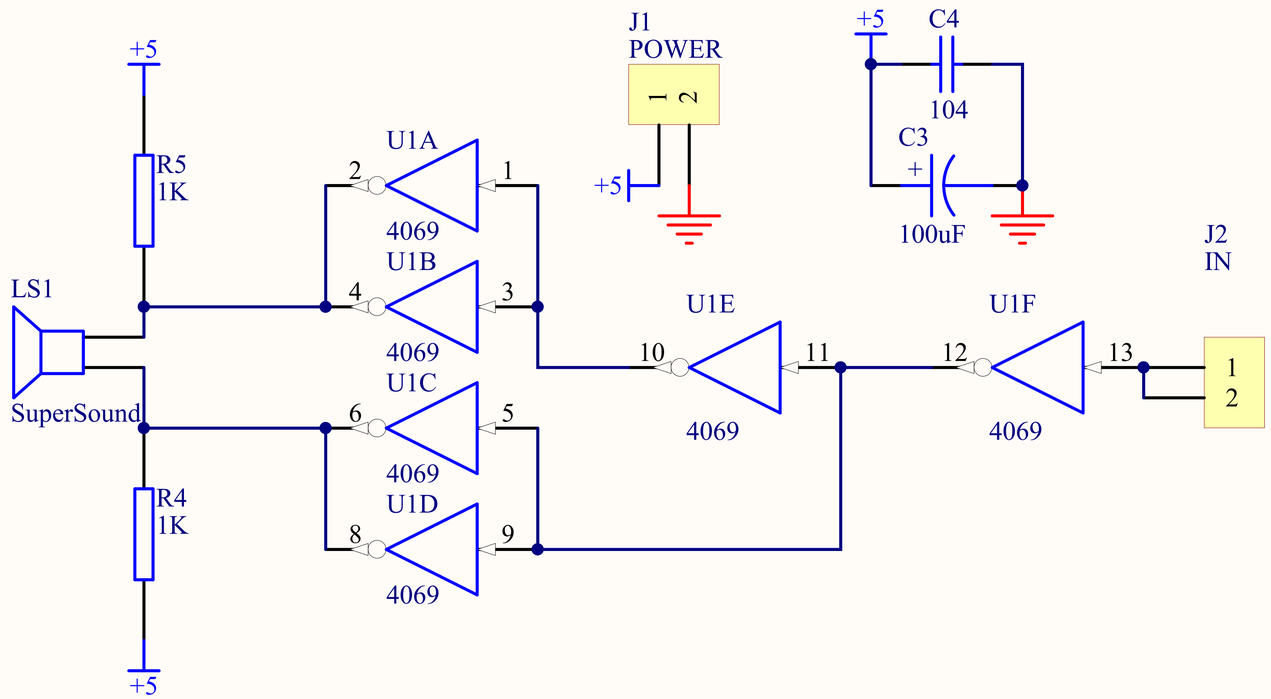

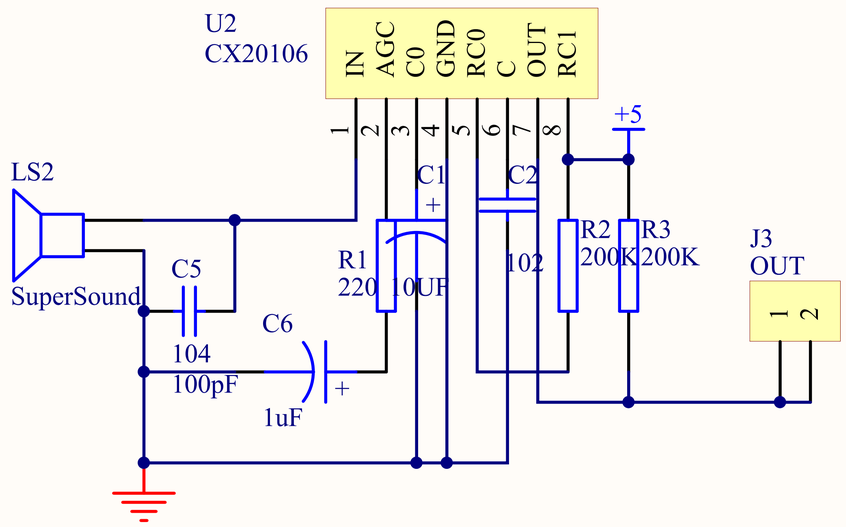

Title		
Size B	Number	Revision
Date: 2011/1/18		Sheet of
File: E:\Temp\ .Sch		Drawn By: