THIS DOCUMENT AND THE DATA DISCLOSED HEREIN OR HEREWITH IS THE PROPERTY OF ALTIUM LIMITED AND MAY BE FREELY DISTRIBUTED IN WHOLE. NO RIGHTS ARE RESERVED OR EXPRESS OR IMPLIED WARANTEE GIVEN.

REVISION	DESCRIPTION	DATE	APPROVED

Arduino UNO

Power IN 12 V

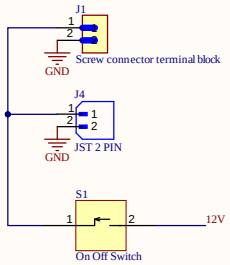

Power IN 5V

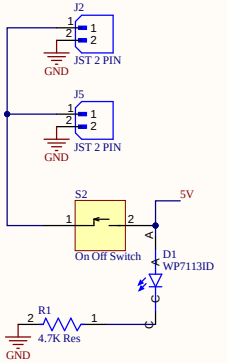

Power IN 6V

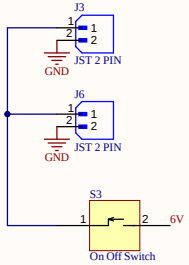

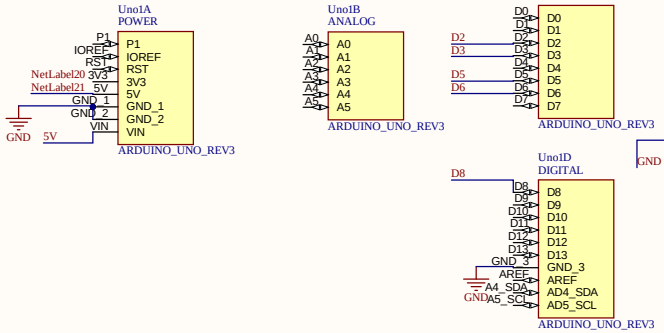

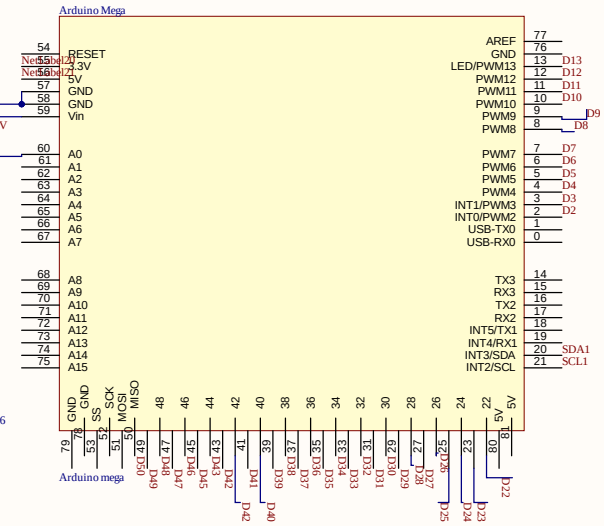

Line hunting sensor

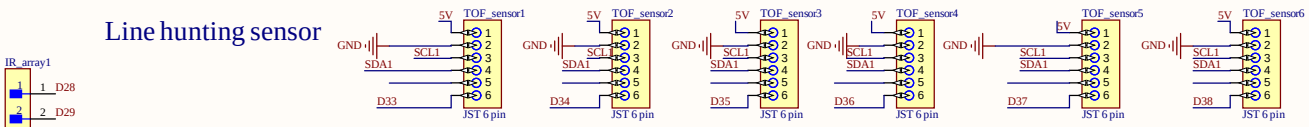

Ball counting

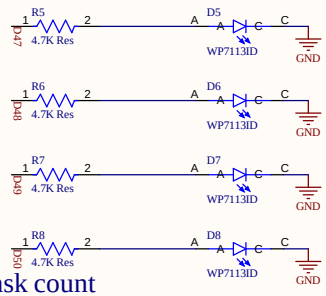

Colour sensor

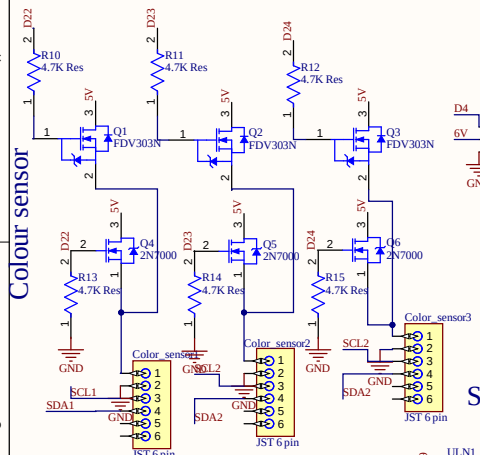

Servo Out

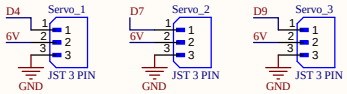

Stepper Arm

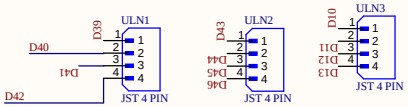

Ring Counter

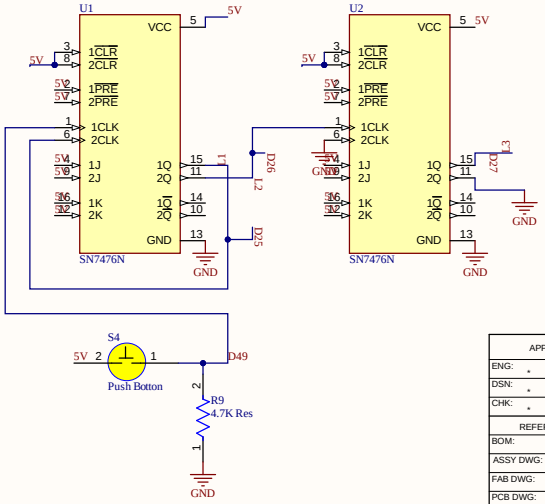

LEDs for task count

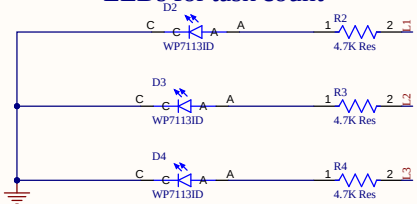

APPROVALS	DATE
ENG: *	
DSN: *	
CHK: *	
REFERENCE DOCUMENTS	
BOM:	
ASSY DWG:	
FAB DWG:	
PCB DWG:	

PROJECT: Altium

PROJECT REVISION: Not in version control | DOCUMENT REVISION: Not in version control | DESIGN ITEM: ItemRevision not interpreted

TITLE: *

SIZE: A3 | CAGE CODE | DWG NO. | REV: ItemRevision not inter

SCALE: | FILE NAME: Real_Steel_Robotics.SchDoc | SHEET 1 OF 1