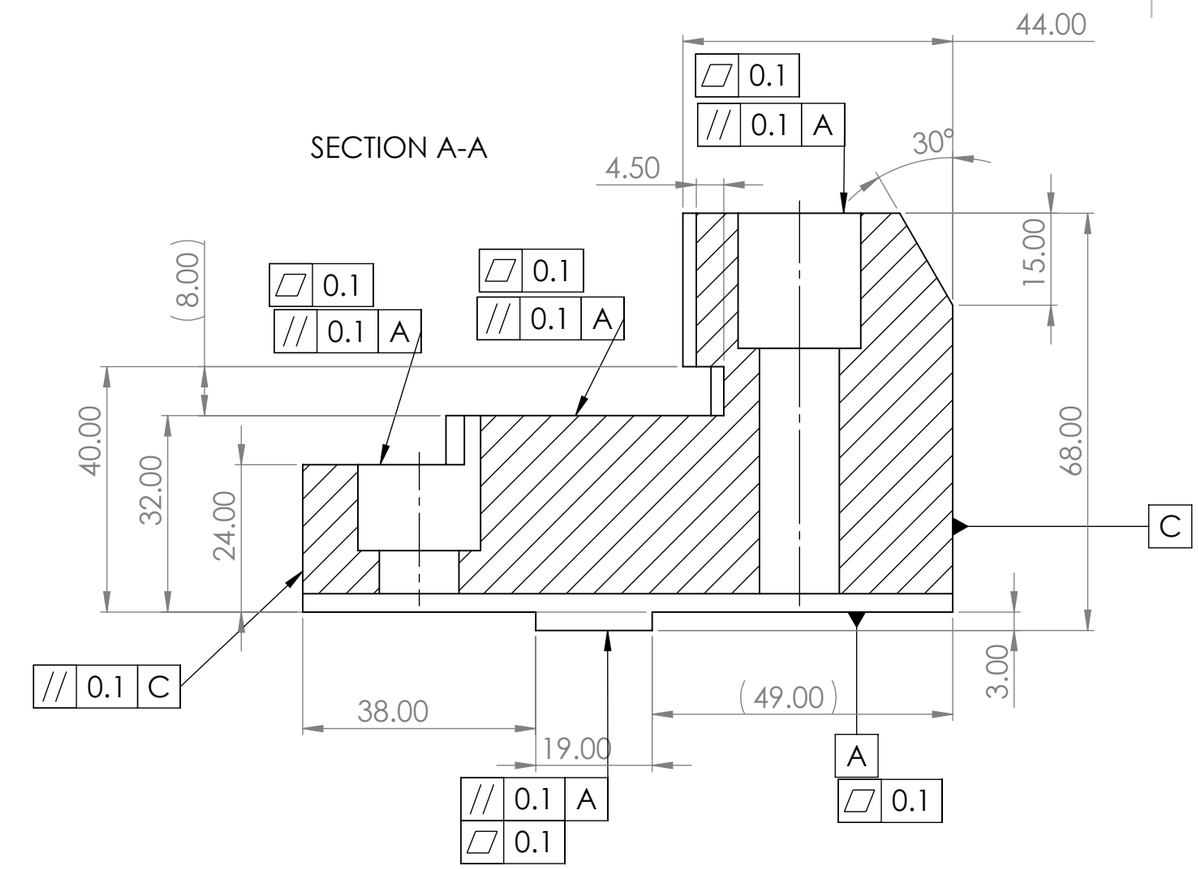

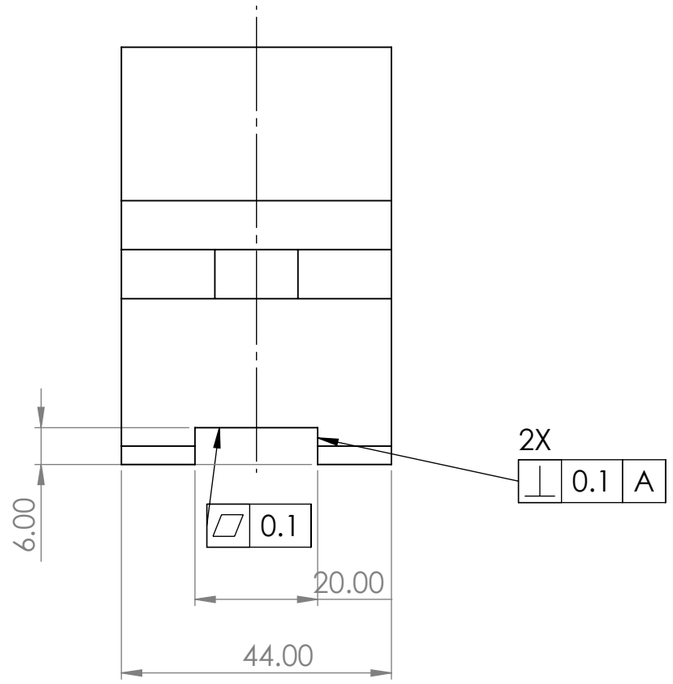

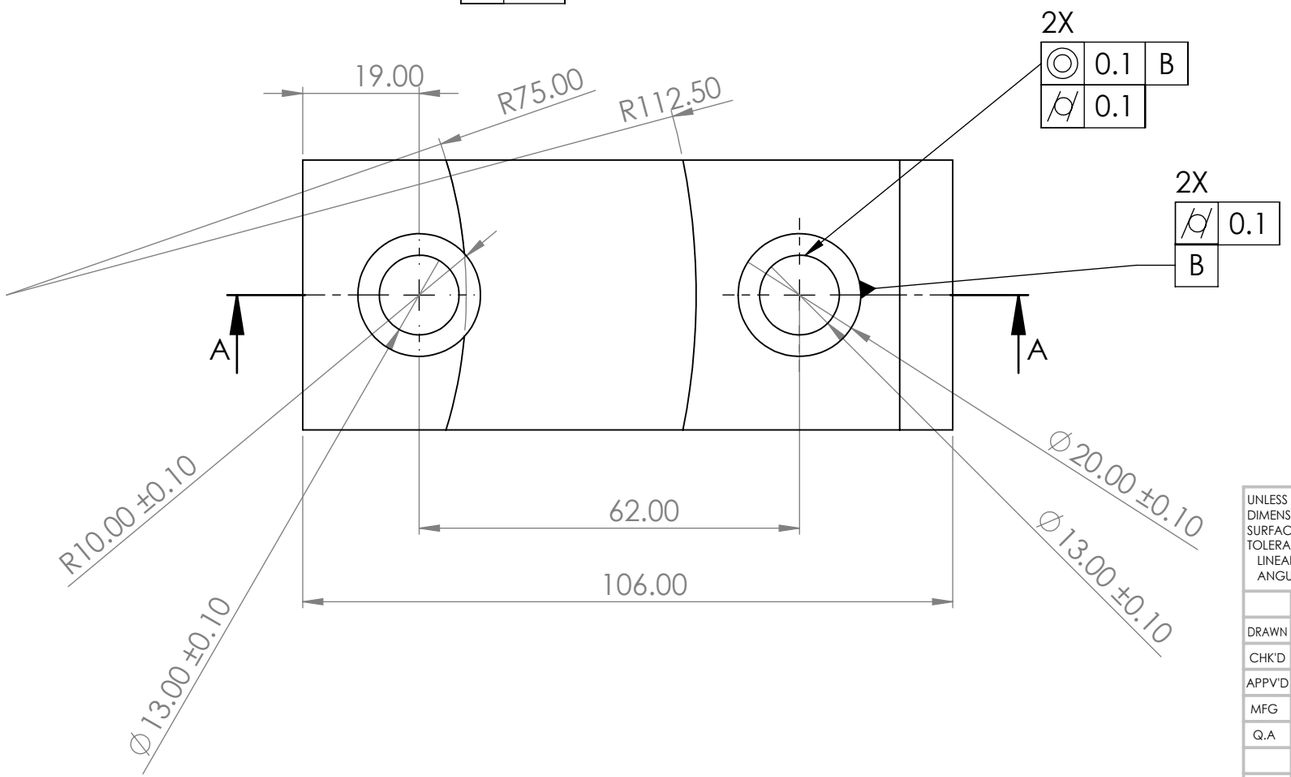

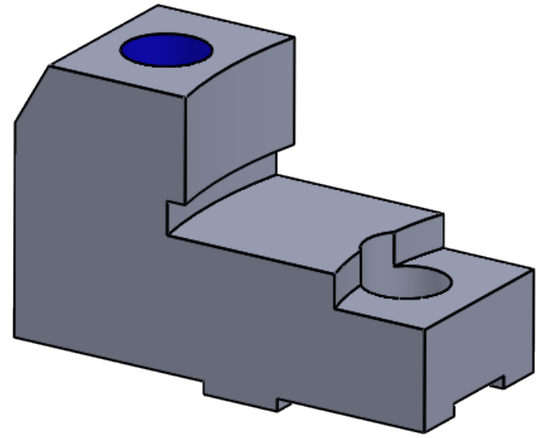

UNLESS OTHERWISE SPECIFIED: DIMENSIONS ARE IN MILLIMETERS SURFACE FINISH: TOLERANCES: LINEAR:±0.3 ANGULAR:±0.5°	FINISH:			DEBURR AND BREAK SHARP EDGES	DO NOT SCALE DRAWING	REVISION	
	NAME	SIGNATURE	DATE		TITLE:		
DRAWN	Ido		9.5.21				
CHK'D							
APPV'D							
MFG							
Q.A				MATERIAL:	DWG NO. hw2		A3
				WEIGHT:	SCALE:1:1	SHEET 1 OF 1	

SOLIDWORKS Educational Product. For Instructional Use Only.