VERTICAL AUTONOMY

VA-120

RUNWAY INDEPENDENT | LONG ENDURANCE | SATCOM ENABLED

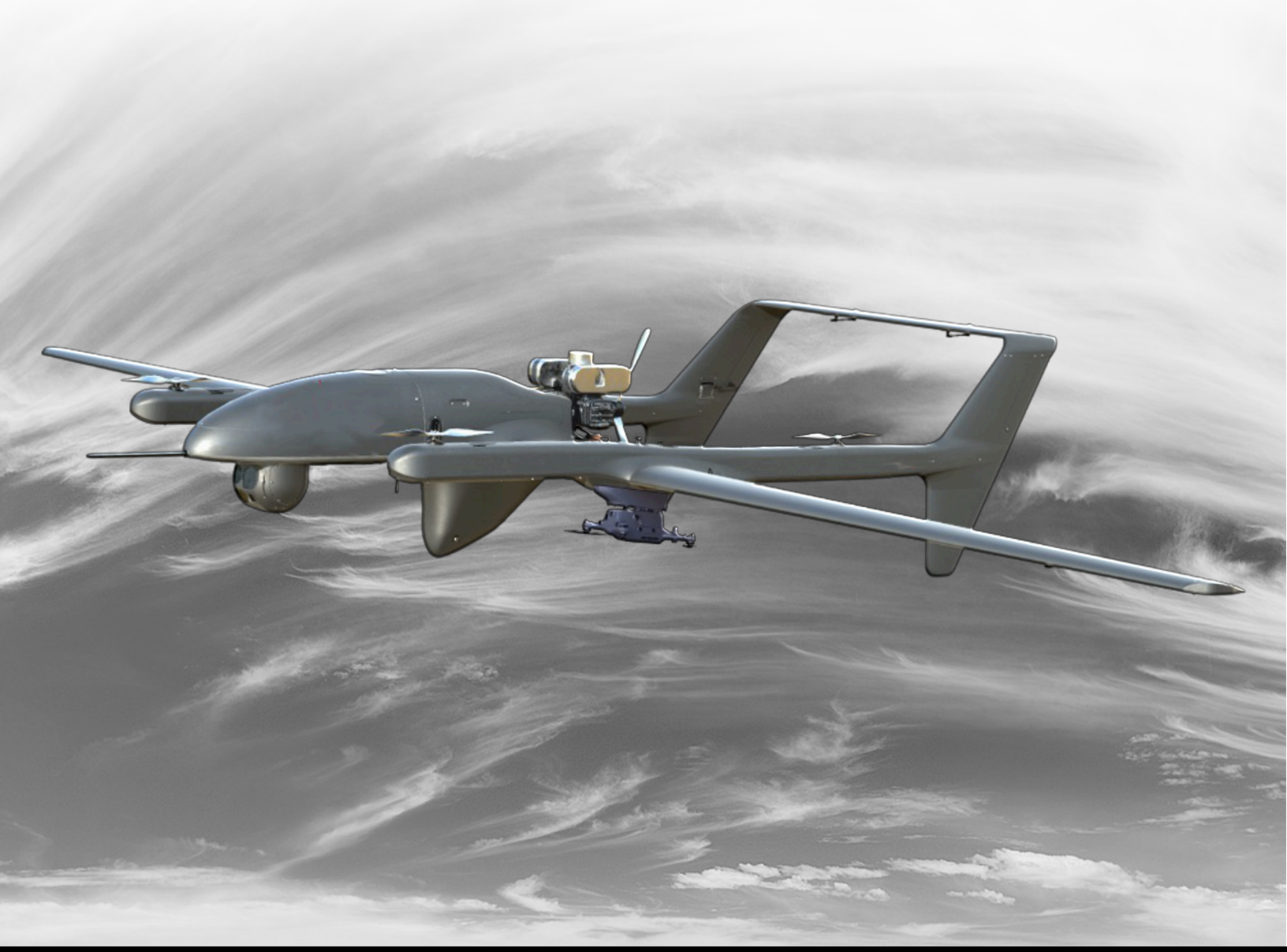

The VA-120 is a long-endurance, vertical takeoff and landing (VTOL) unmanned aircraft system built for ISR, communications, and remote sensing missions. Evolved from a proven platform with thousands of operational flight hours, it delivers the same trusted reliability—now under new leadership and a renewed focus on mission execution. Combining fixed-wing efficiency with autonomous VTOL, the VA-120 enables launch and recovery in austere or mobile environments without additional equipment. With industry-leading moving baseline capability, it supports operations from moving vehicles and maritime vessels. Modular payloads, SATCOM connectivity, and advanced autonomy provide 8–16 hours of endurance and unmatched flexibility, all backed by Vertical Autonomy's integrated engineering, manufacturing, and flight operations team.

ADVANCING THE FUTURE OF LONG ENDURANCE HYBRID FLIGHT

KEY FEATURES

- VTOL launch and recovery from land, vehicles or maritime vessels - anywhere
- Reliable propulsion system optimized for endurance and maintainability
- Fuel-efficient design supports 8-16 hour missions and 300+ nmi radius
- Modular payload bays enable rapid swaps for EO/IR, SIGINT, comms, and more (50+ integrated to date)
- Integrated SATCOM connectivity enabling global command, control, and data
- Two-person deployable, minimum logistics footprint

PAYLOAD OPTIONS

EO/IR gimbals

Synthetic aperture radar

Communications relay

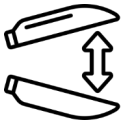

Modular mounting points

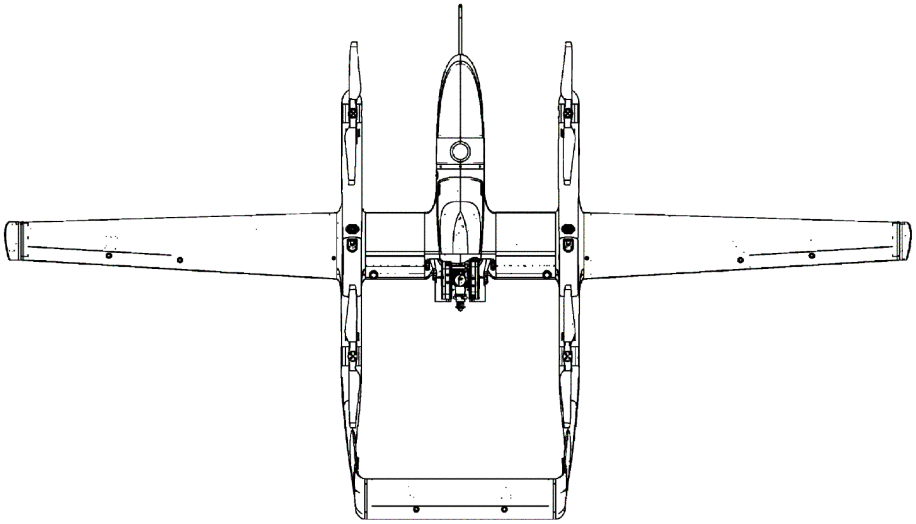

VA-120 Specifications		
[Airframe]		
Wingspan	16.0 ft	4.88 m
Length	8.17 ft	2.49 m
Height	2.17 ft	0.66 m
Propulsion (50:1)	Cobra AERO B100iJ	
Empty Weight	75 lbs	34 kg
Gross Weight	150 lbs	68.0 kg
Payload (Nose)	25 lbs	11.3 kg
Payload (Booms)	10 lbs	4.53 kg
[Performance]		
Endurance	8 - 16 hrs	
Range	675 nmi	1,500 km
Cruise Speed	42 kts	
Maximum Speed	65 kts	
Service Ceiling*	18,000 ft	5,486 m
VTOL Ceiling*	9,000 ft	2,743 m
Comms Range (MANET)	75 nmi	139 km
Comms Range (SATCOM)	Unlimited	
Landing Zone	25 ft x 25 ft	7.62 m x 7.62 m
Maximum Winds (Cross)	30 kts (30 kts)	
Max/Min Temperature	120°F (-20°F)	49°C (-19°C)

*Density altitude

Note: Performance may vary based on environmental conditions, aircraft configuration, and mission profile.

VERTICAL AUTONOMY

250 Industrial Way
Hillsdale, MI 49242
ph: (313) 312-0303
www.verticalautonomy.com
info@verticalautonomycom

This document consists of general capabilities information that is not defined as controlled technical data under ITAR Part 120.10 or EAR Part 772. Data, including specifications, contained within this document are summary in nature and subject to change at any time without notice. Call for the latest revision.