VERTICAL AUTONOMY

VA-55

RUNWAY INDEPENDENT | EXPEDITIONARY | SATCOM ENABLED

The VA-55 is an expeditionary VTOL unmanned aircraft system built for tactical ISR, communications relay, and remote sensing missions. Evolving from a proven platform with extensive flight history, it delivers trusted performance in a smaller, highly mobile form factor. The VA-55 combines fixed-wing efficiency with autonomous VTOL, enabling launch and recovery in austere or confined environments without additional equipment. Operable by a two-person crew, it features modular payloads, heavy-fuel propulsion, and advanced autonomy—including one of the industry's most mature VTOL-to-forward-flight transition systems—for exceptional mission flexibility, rapid deployment, and pack-in/pack-out capability. Backed by Vertical Autonomy's integrated engineering and manufacturing team, the VA-55 is built for continuous modernization and long-term support.

ADVANCING THE FUTURE OF EXPEDITIONARY HYBRID FLIGHT

KEY FEATURES

- VTOL launch and recovery from land, vehicles, or maritime vessels—no infrastructure required
- Heavy-fuel engine for reliable performance and simplified logistics across joint environments
- Fuel-efficient design supports 6-10 hour missions and 300+ nmi radius
- Modular payload bay enabling rapid swaps for EO/IR, SIGINT, comms relay, and other mission kits
- Optional SATCOM connectivity for global command, control, and data routing
- Two-person deployable with a minimal logistics footprint, optimized for pack-in/pack-out operations footprint

PAYLOAD OPTIONS

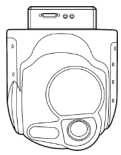

EO/IR gimbals

Synthetic aperture radar

Communications relay

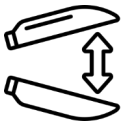

Modular mounting points

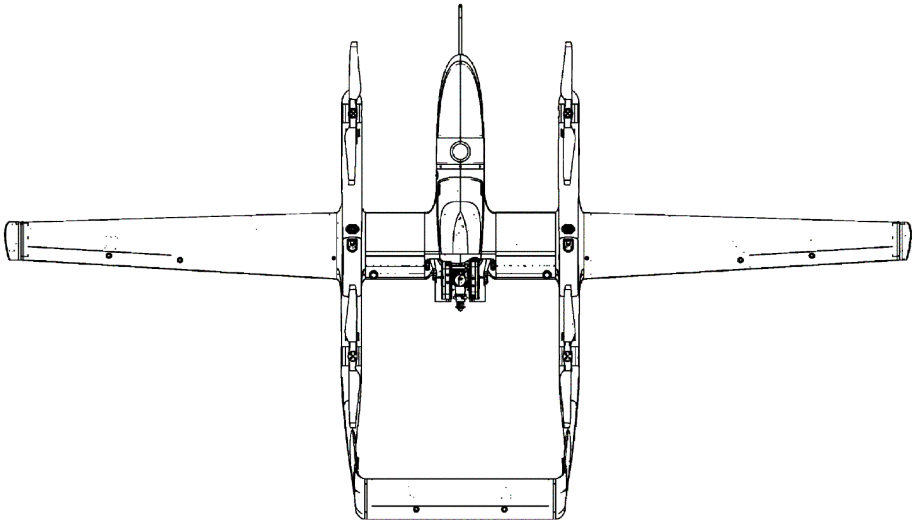

Specifications		
[Airframe]		
Wingspan	13.0 ft	3.96 m
Length	6.75 ft	2.06 m
Height	1.08 ft	0.33 m
Propulsion (JP5)	Cobra AERO A33HF	
Propulsion (50:1)	Cobra AERO A33N	
Empty Weight	37 lbs	16.78 kg
Gross Weight	55 lbs	24.95kg
Payload (Nose)	10 lbs	4.54 kg
Payload (Booms)	2 lbs	0.91 kg
[Performance]		
Endurance	6 - 10 hrs	
Range	360 nmi	666 km
Cruise Speed	36 kts	
Maximum Speed	60 kts	
Service Ceiling*	12,000 ft	3,658 m
VTOL Ceiling*	7,000 ft	2,134 m
Comms Range (MANET)	75 nmi	139 km
Comms Range (SATCOM)	Unlimited	
Landing Zone	20 ft x 20 ft	6.1 m x 6.1 m
Maximum Winds (Cross)	30 kts (30 kts)	
Max/Min Temperature	120°F (-20°F)	49°C (-19°C)

*Density altitude

Note: Performance may vary based on environmental conditions, aircraft configuration, and mission profile.

VERTICAL AUTONOMY

250 Industrial Way
Hillsdale, MI 49242
ph: (313) 312-0303
www.verticalautonomy.com
info@verticalautonomycom

This document consists of general capabilities information that is not defined as controlled technical data under ITAR Part 120.10 or EAR Part 772. Data, including specifications, contained within this document are summary in nature and subject to change at any time without notice. Call for the latest revision.