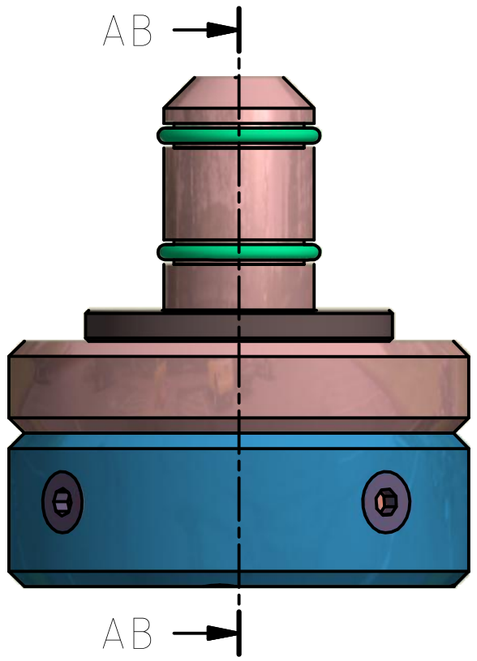

AB-AB (5 : 1)

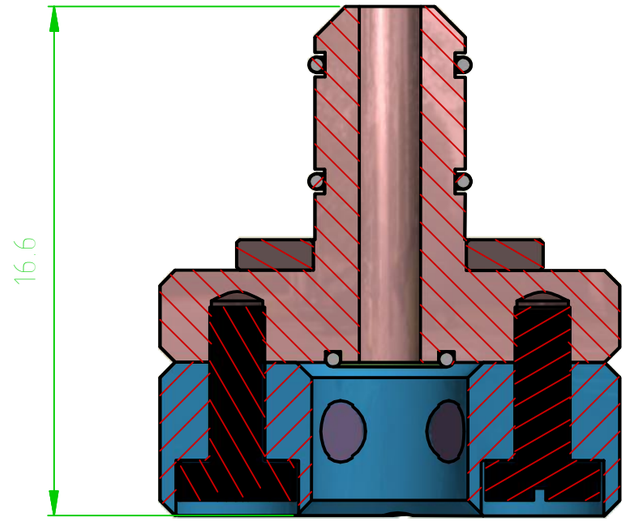

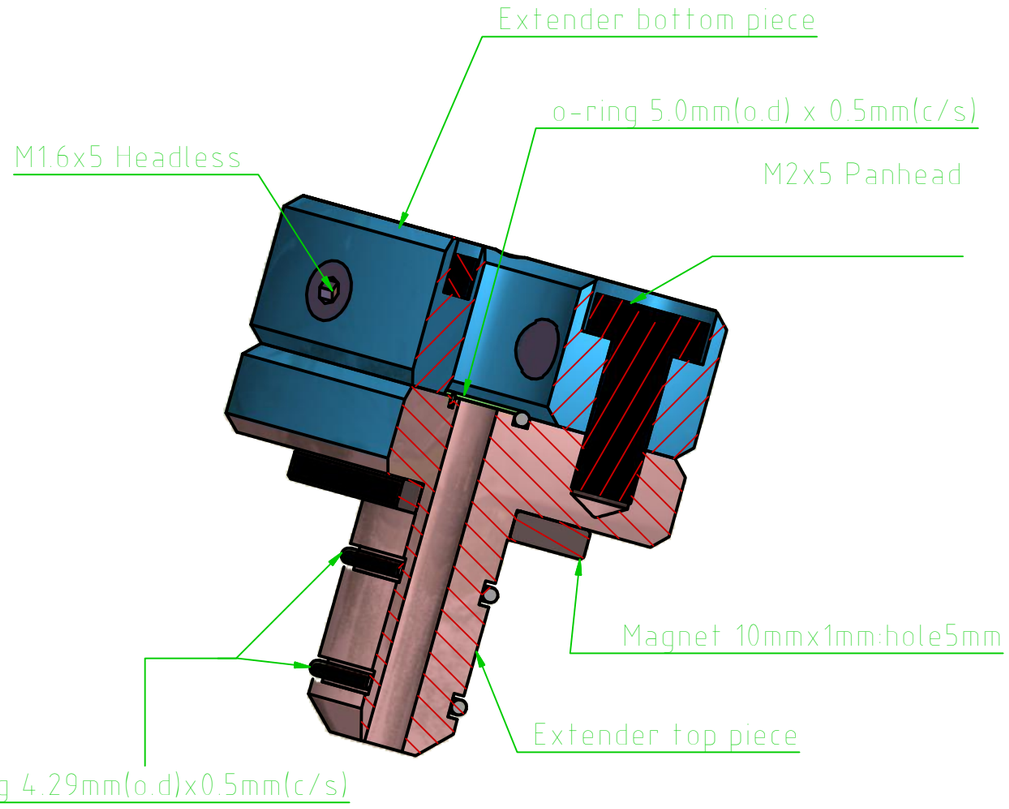

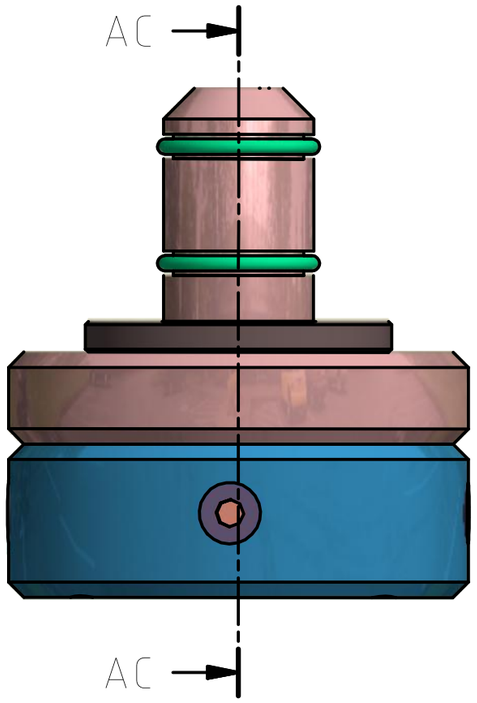

AC-AC (5 : 1)

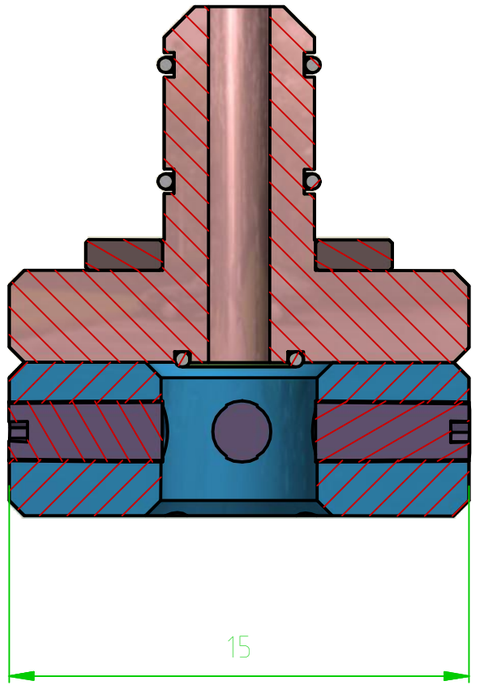

Parts

- 1x Extender top piece
- 1x Extender bottom piece
- 1x o-ring 5mm(o.d) x 0.5mm (c/s)
- 2x o-ring 4.29mm(o.d) x 0.5mm (c/s)
- 1x Magnet 10mm x 1mm hole 5mm
- 4x M2x5 Panhead
- 4x M1.6x5 Headless

FILE NAME Extender Assembly	FSCM NO	SHEET	SCALE 5 : 1
SIZE			
DRAWN 12-1-2015 I.C.E.C			
CHECK		Pick & Place Tool	
APPR.		FirePick Delta Modular Tool Tip	
ISSUED			
REV C		DWG NO	
CONTRACT №			