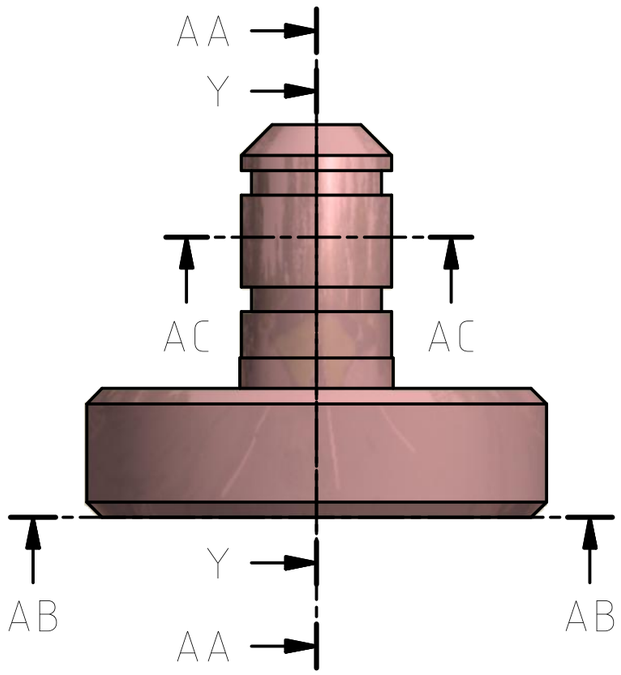

Y-Y (5 : 1)

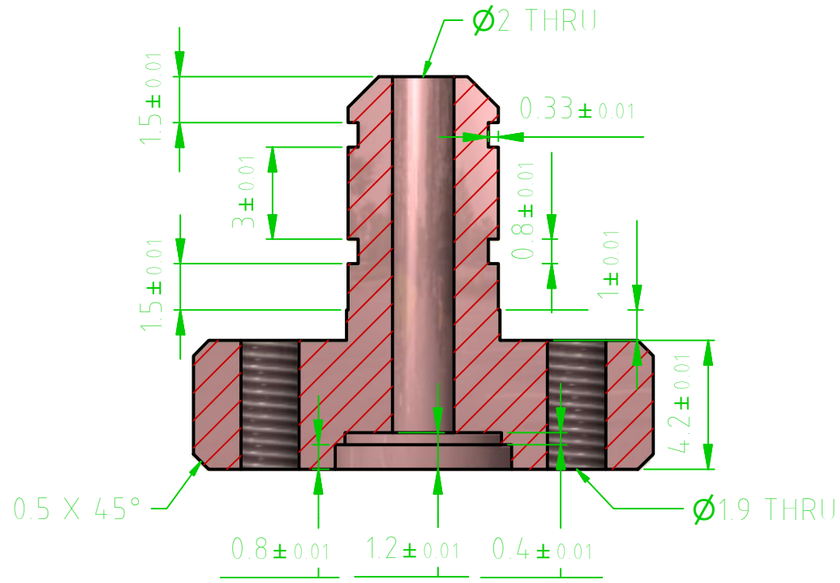

AA-AA (5 : 1)

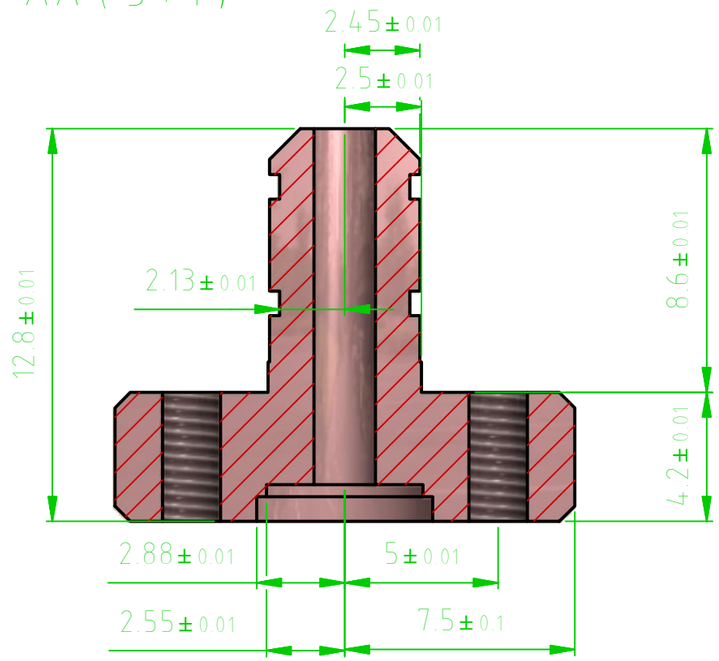

AB-AB (5 : 1)

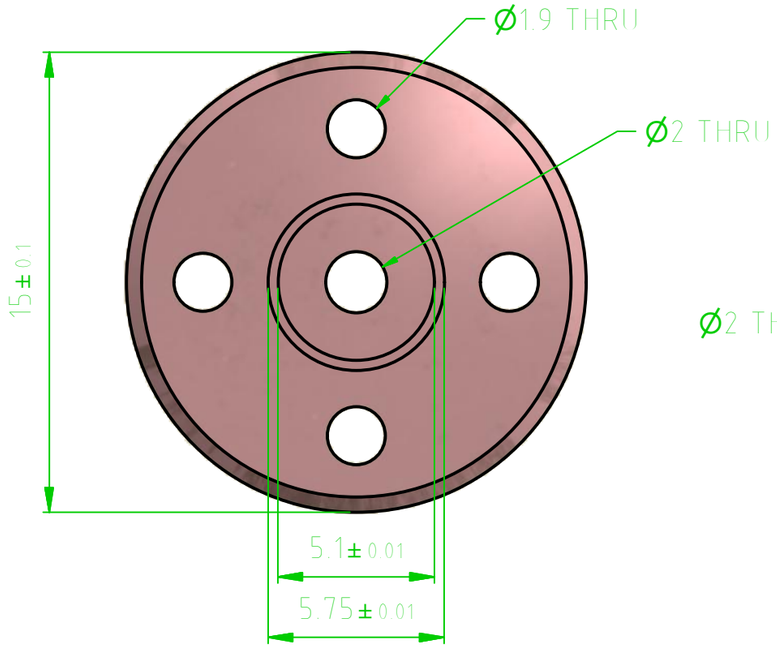

AC-AC (5 : 1)

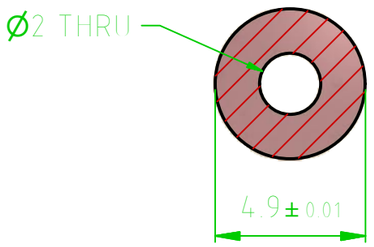

Changes in Rev C

-Made piece a bit longer for bottom axial o-ring design

-Changed blind taped holes to tru hole for easy machining

- Reposition bottom grove for O-ring to axial position in design

- No overall length change, total length is 11.6mm

FILE NAME Extender Top	FSCM NO	SHEET	SCALE 5 : 1
SIZE			
DRAWN 7-1-2015 I.C.E.C			
CHECK		Pick & Place Tool	
APPR.		FirePick Delta Modular Tool Tip	
ISSUED 12-1-2015 I.C.E.C			
REV C		DWG NO	
CONTRACT NO			