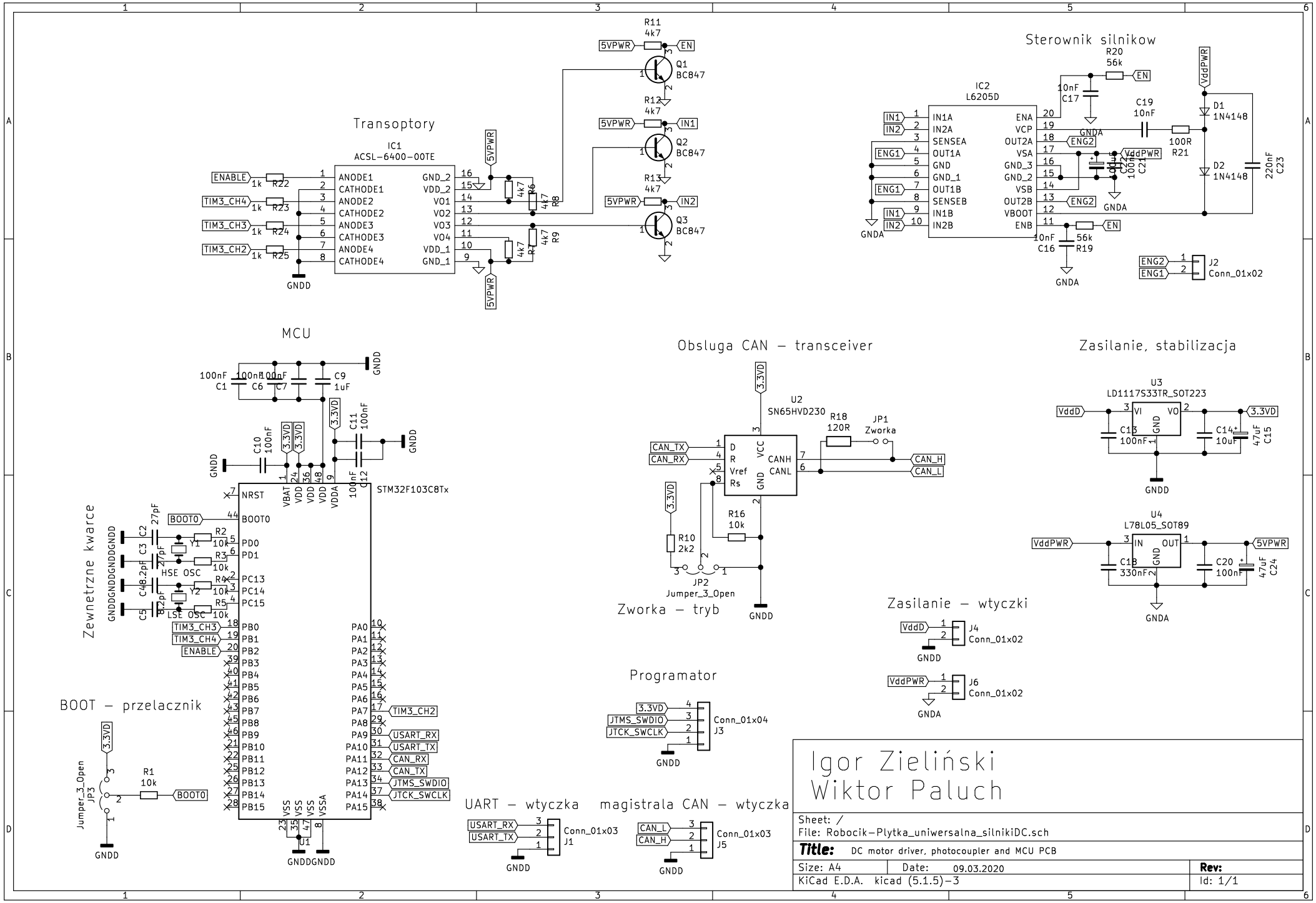
Transoptory
IC1
ACSL-6400-00TE
ANODE1
CATHODE1
ANODE2
CATHODE2
ANODE3
CATHODE3
ANODE4
CATHODE4
GND_2
VDD_2
VO1
VO2
VO3
VO4
VDD_1
GND_1
ENABLE
TIM3_CH4
TIM3_CH3
TIM3_CH2
R22
R23
R24
R25
R6
R7
R8
R9
R11
R12
R13
Q1
Q2
Q3
BC847
5VPWR
EN
IN1
IN2
GNDD
Sterownik silnikow
IC2
L6205D
IN1A
IN2A
SENSEA
OUT1A
GND
GND_1
OUT1B
SENSEB
IN1B
IN2B
ENA
VCP
OUT2A
VSA
GND_3
GND_2
VSB
OUT2B
VBOOT
ENB
ENG1
ENG2
R20
56k
C17
10nF
C19
10nF
R21
100R
D1
1N4148
D2
1N4148
C23
220nF
C22
100nF
C21
100uF
C16
10nF
R19
56k
GNDA
VddPWR
J2
Conn_01x02
MCU
STM32F103C8Tx
NRST
BOOT0
VBAT
VDD
VDDA
PD0
PD1
PC13
PC14
PC15
PB0
PB1
PB2
PB3
PB4
PB5
PB6
PB7
PB8
PB9
PB10
PB11
PB12
PB13
PB14
PB15
PA0
PA1
PA2
PA3
PA4
PA5
PA6
PA7
PA8
PA9
PA10
PA11
PA12
PA13
PA14
PA15
VSS
VSSA
U1
C1
C6
C7
C9
1uF
C10
100nF
C11
100nF
C12
100nF
3.3VD
Zewnetrzne kwarce
C2
27pF
C3
27pF
C4
8.2pF
C5
8.2pF
Y1
Y2
HSE OSC
LSE OSC
R2
R3
R4
R5
10k
GNDDGNDDGNDDGNDD
TIM3_CH3
TIM3_CH4
ENABLE
TIM3_CH2
USART_RX
USART_TX
CAN_RX
CAN_TX
JTMS_SWDIO
JTCK_SWCLK
BOOT – przelacznik
R1
10k
Jumper_3_Open
JP3
Obsluga CAN – transceiver
U2
SN65HVD230
D
R
Vref
Rs
VCC
GND
CANH
CANL
R18
120R
JP1
Zworka
R16
10k
R10
2k2
JP2
Jumper_3_Open
Zworka – tryb
Programator
Conn_01x04
J3
UART – wtyczka
Conn_01x03
J1
magistrala CAN – wtyczka
Conn_01x03
J5
Zasilanie, stabilizacja
U3
LD1117S33TR_SOT223
VI
VO
GND
C13
100nF
C14
10uF
C15
47uF
U4
L78L05_SOT89
IN
OUT
C18
330nF
C20
100nF
C24
47uF
Zasilanie – wtyczki
J4
Conn_01x02
J6
Conn_01x02
Igor Zieliński
Wiktor Paluch
Sheet: /
File: Robocik-Plytka_uniwersalna_silnikiDC.sch
Title: DC motor driver, photocoupler and MCU PCB
Size: A4
Date: 09.03.2020
Rev:
KiCad E.D.A. kicad (5.1.5)-3
Id: 1/1