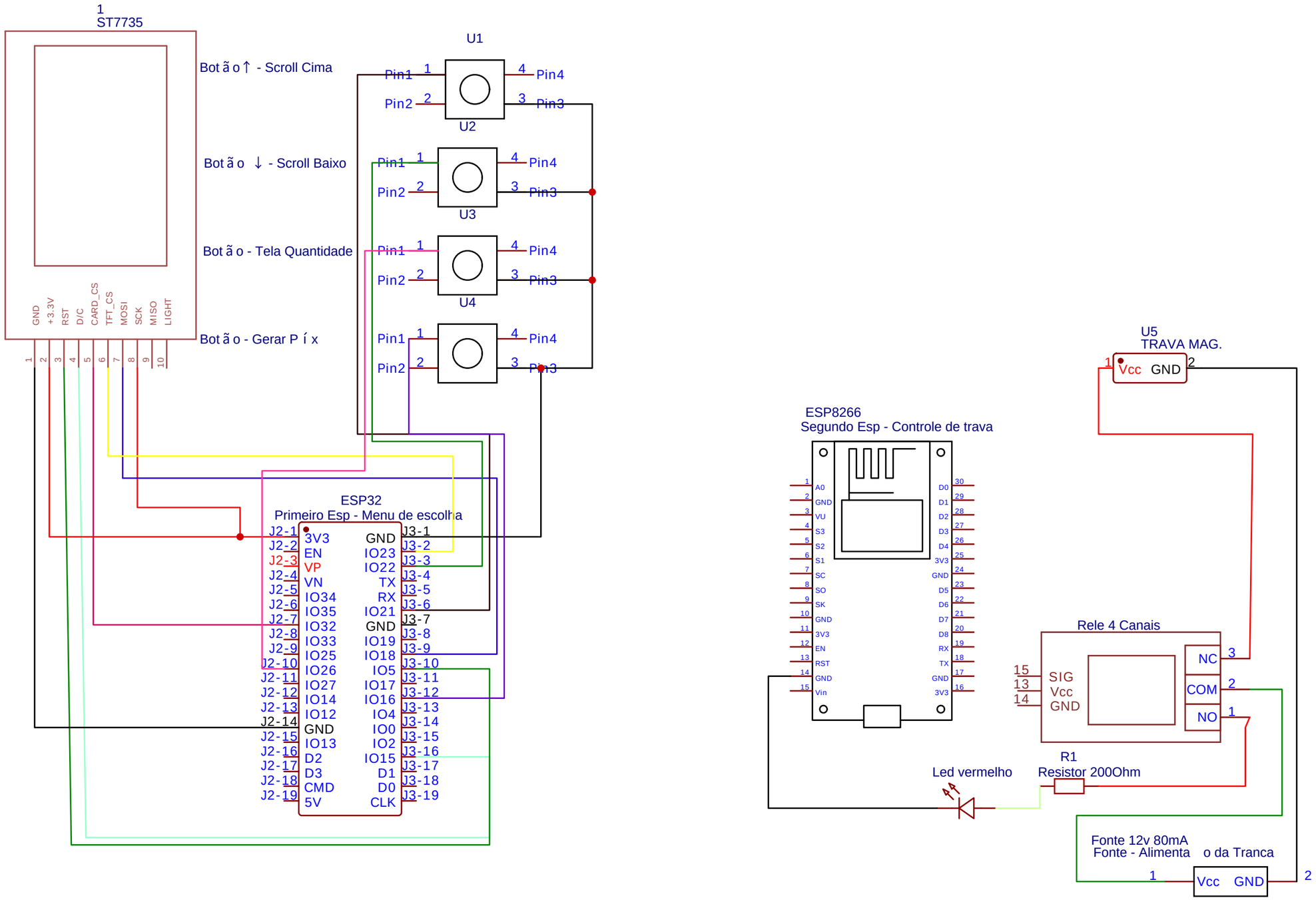

TITLE: Projeto da TRB		REV: 1.0
EasyEDA	Company: Select	Sheet: 1/1
	Date: 2024-09-01 Drawn By:	