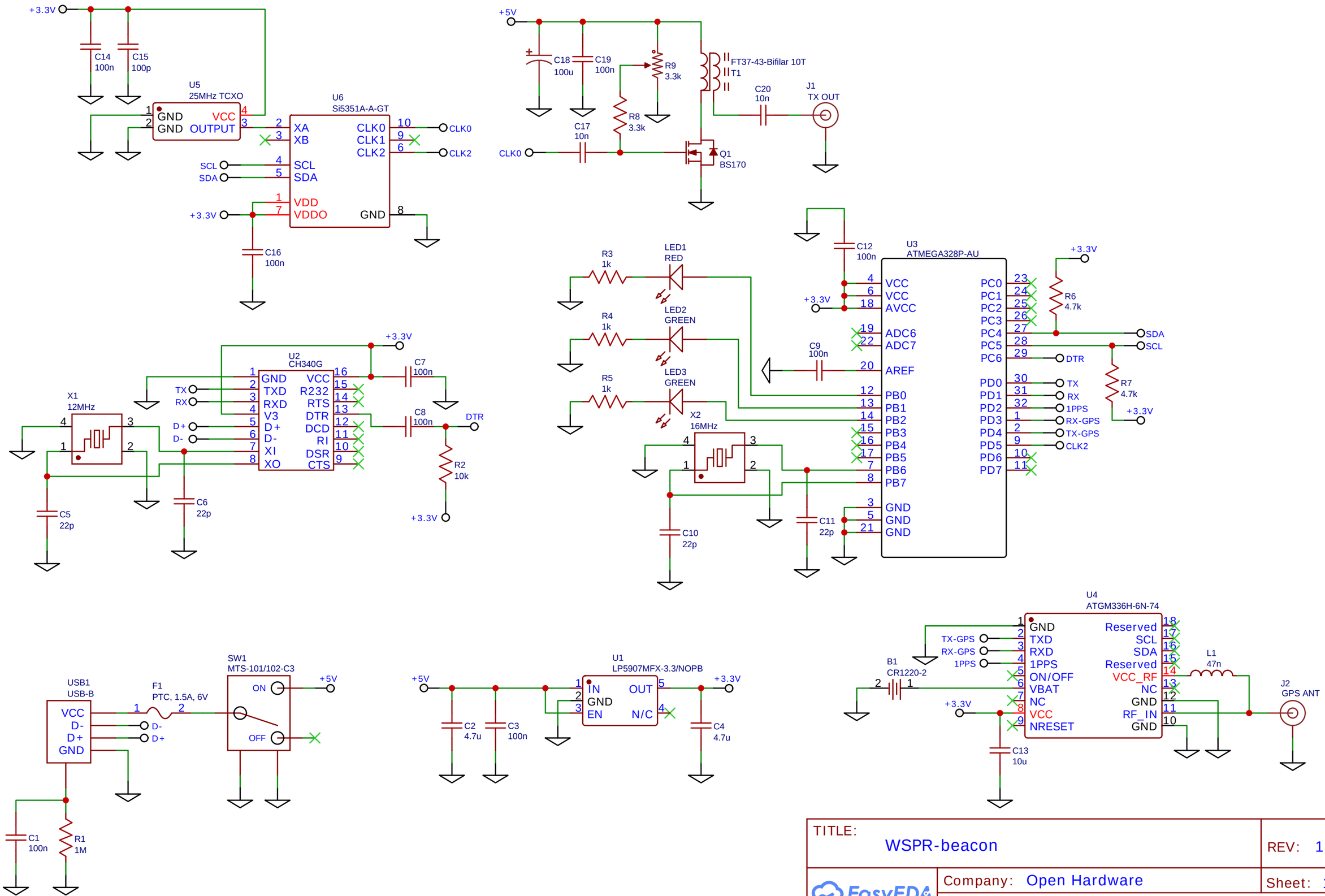

TITLE: WSPR-beacon

REV: 1.0

Company: Open Hardware

Sheet: 1/1

Date: 2024-05-15

Drawn By: IgrikXD