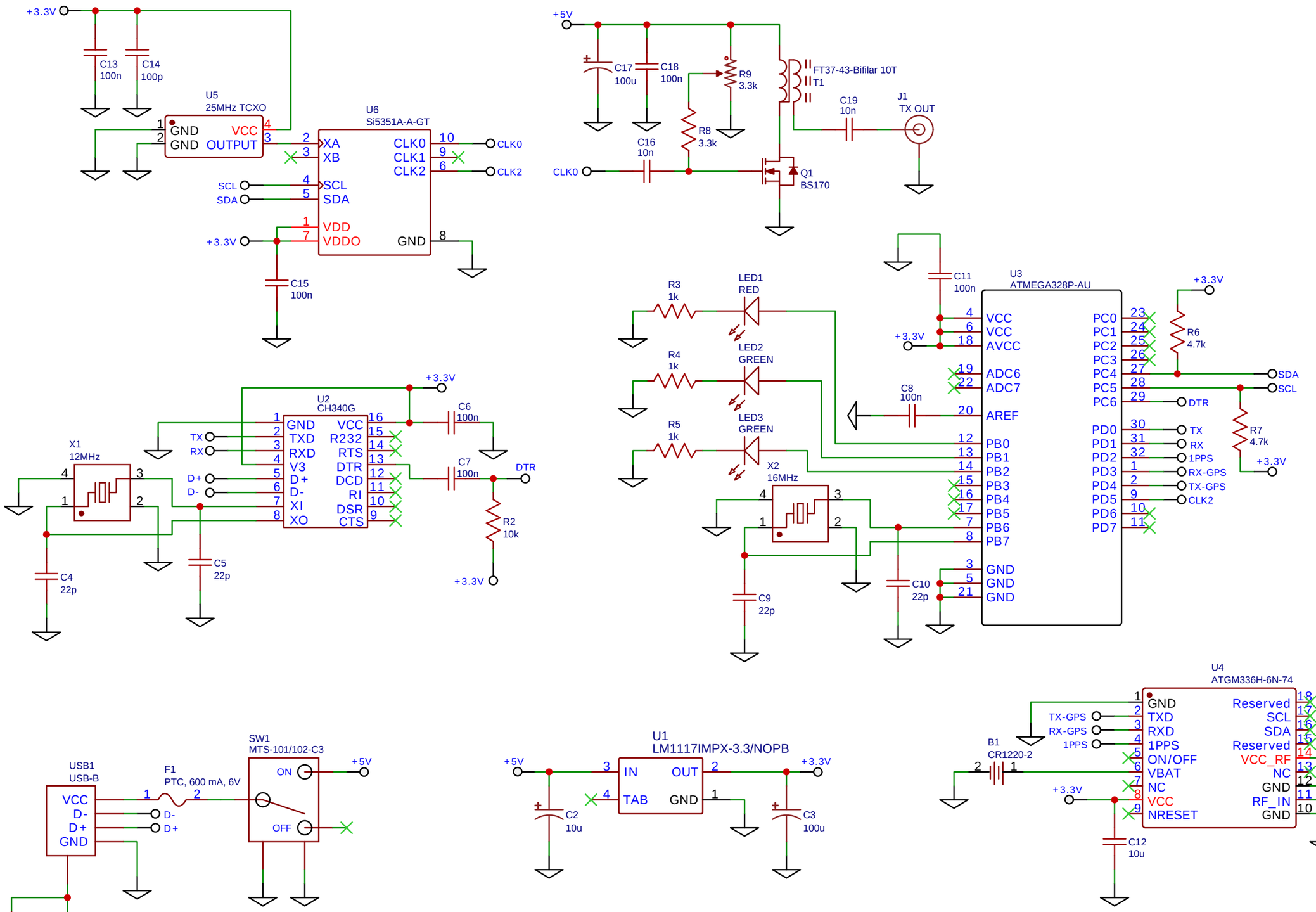

TITLE: WSPR-beacon	REV: 1.0
Company: Open Hardware	Sheet: 1/1
Date: 2024-05-15 Drawn By: IgrikXD	