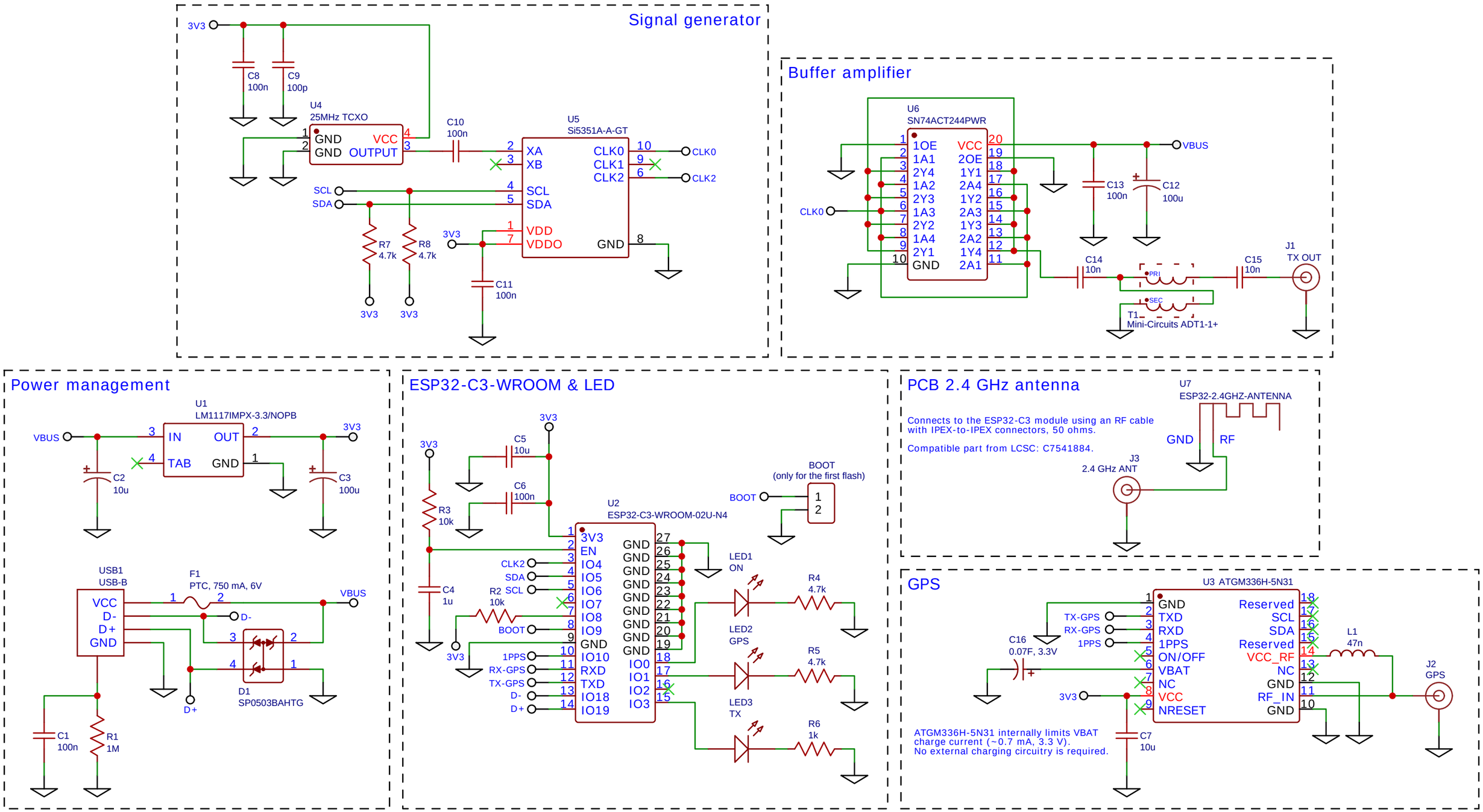

TITLE: WSPR-beacon	REV: 3.3
Company: https://github.com/IgrikXD/WSPR-beacon	Sheet: 1/1
Date: 2025-12-03 Drawn By: IgrikXD	