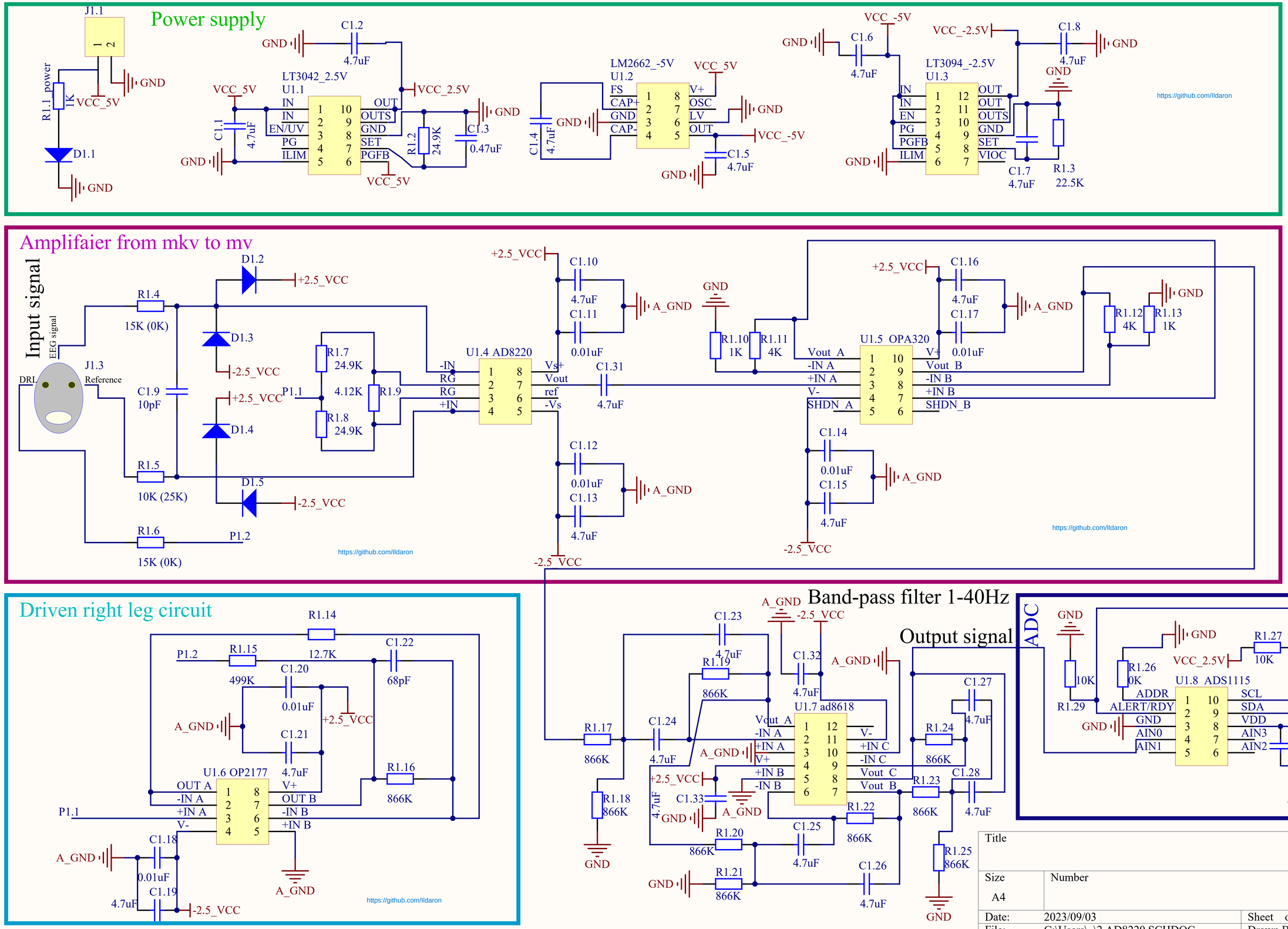
Power supply
J1.1
R1.1_power
1K
VCC_5V
GND
D1.1
LT3042_2.5V
U1.1
C1.2
4.7uF
VCC_2.5V
C1.1
C1.3
0.47uF
R1.2
24.9K
LM2662_-5V
U1.2
VCC_5V
C1.4
C1.5
4.7uF
VCC_-5V
LT3094_-2.5V
U1.3
C1.6
C1.7
C1.8
R1.3
22.5K
https://github.com/lldaron
Amplifaier from mkv to mv
Input signal
EEG signal
J1.3
DRL
Reference
R1.4
15K (0K)
R1.5
10K (25K)
R1.6
15K (0K)
C1.9
10pF
D1.2
D1.3
D1.4
D1.5
+2.5_VCC
-2.5_VCC
R1.7
24.9K
R1.8
24.9K
R1.9
4.12K
P1.1
P1.2
U1.4 AD8220
-IN
RG
RG
+IN
Vs+
Vout
ref
-Vs
C1.10
C1.11
C1.12
C1.13
C1.31
A_GND
U1.5 OPA320
Vout_A
-IN A
+IN A
V-
SHDN_A
V+
Vout_B
-IN B
+IN B
SHDN_B
C1.16
C1.17
C1.14
C1.15
R1.10
1K
R1.11
4K
R1.12
4K
R1.13
1K
https://github.com/lldaron
Driven right leg circuit
R1.14
12.7K
R1.15
499K
C1.20
0.01uF
C1.21
4.7uF
C1.22
68pF
R1.16
866K
U1.6 OP2177
OUT A
-IN A
+IN A
V-
V+
OUT B
-IN B
+IN B
C1.18
0.01uF
C1.19
4.7uF
A_GND
https://github.com/lldaron
Band-pass filter 1-40Hz
Output signal
C1.23
4.7uF
R1.19
866K
C1.32
4.7uF
R1.17
866K
C1.24
4.7uF
R1.18
866K
U1.7 ad8618
Vout_A
-IN A
+IN A
V+
+IN B
-IN B
V-
+IN C
-IN C
Vout_C
Vout_B
C1.33
R1.20
866K
C1.25
4.7uF
R1.21
866K
R1.22
866K
C1.26
4.7uF
R1.23
866K
C1.28
4.7uF
R1.24
866K
C1.27
4.7uF
R1.25
866K
ADC
J1.2
RDY
SCL
SDA
R1.27
10K
R1.26
0K
R1.29
10K
R1.28
10K
U1.8 ADS1115
ADDR
ALERT/RDY
GND
AIN0
AIN1
SCL
SDA
VDD
AIN3
AIN2
C1.29
0.01uF
C1.30
4.7uF
VCC_2.5V
Title
Size
A4
Number
Revision
Date: 2023/09/03
Sheet of
File: C:\Users\..\2.AD8220.SCHDOC
Drawn By: