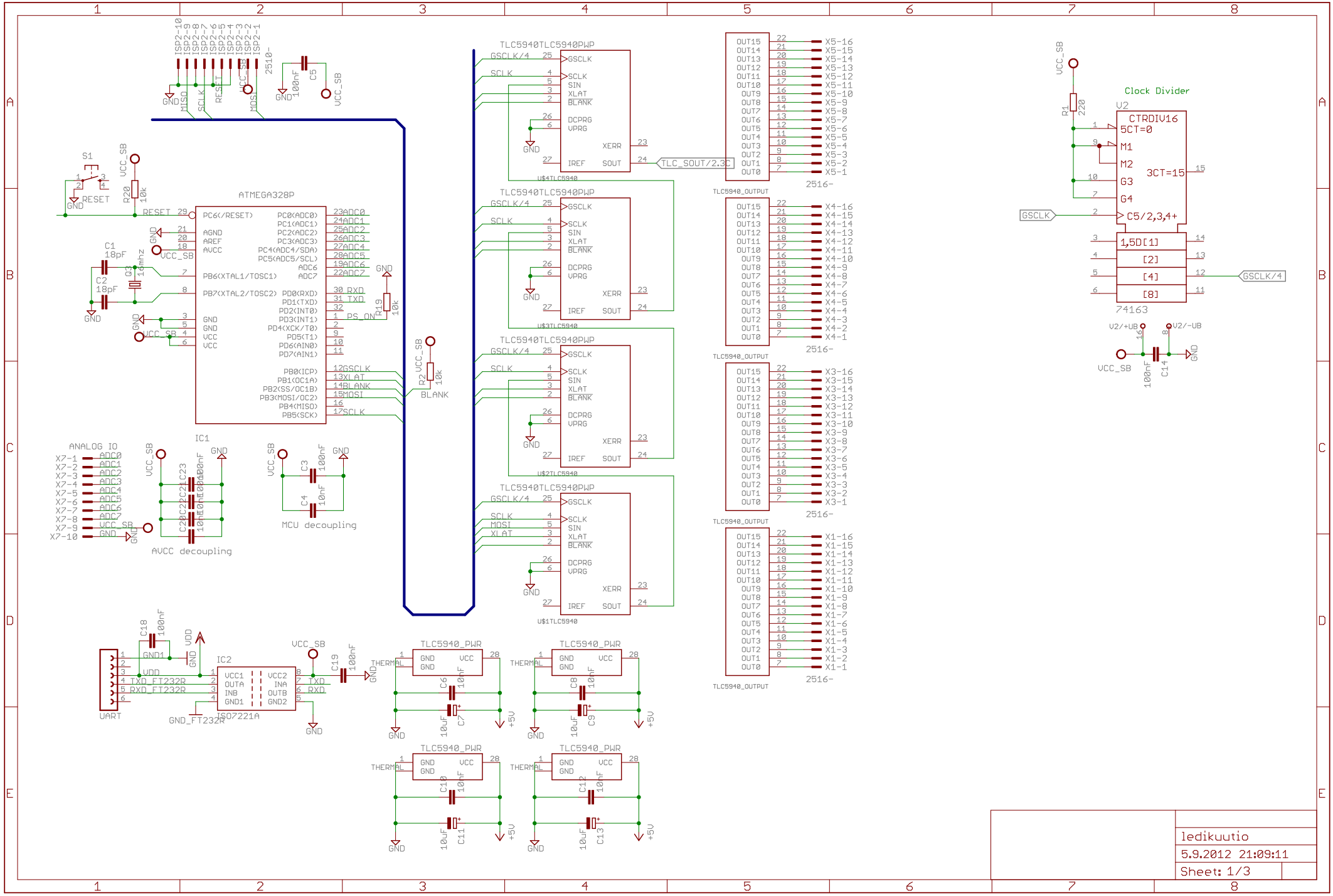
ATMEGA328P
IC1
TLC5940TLC5940PWP
U$4TLC5940
U$3TLC5940
U$2TLC5940
U$1TLC5940
TLC5940_OUTPUT
2516-
TLC_SOUT/2,3C
Clock Divider
CTRDIV16
5CT=0
3CT=15
C5/2,5,4+
1,5D[1]
74163
GSCLK
GSCLK/4
BLANK
MOSI
MISO
SCLK
RESET
ISP2-10
ISP2-9
ISP2-8
ISP2-7
ISP2-6
ISP2-5
ISP2-4
ISP2-3
ISP2-2
ISP2-1
2510-
VCC_SB
GND
ANALOG IO
AVCC decoupling
MCU decoupling
UART
IC2
ISO7221A
GND_FT232R
TXD_FT232R
RXD_FT232R
TLC5940_PWR
THERMAL
+5V
ledikuutio
5.9.2012 21:09:11
Sheet: 1/3

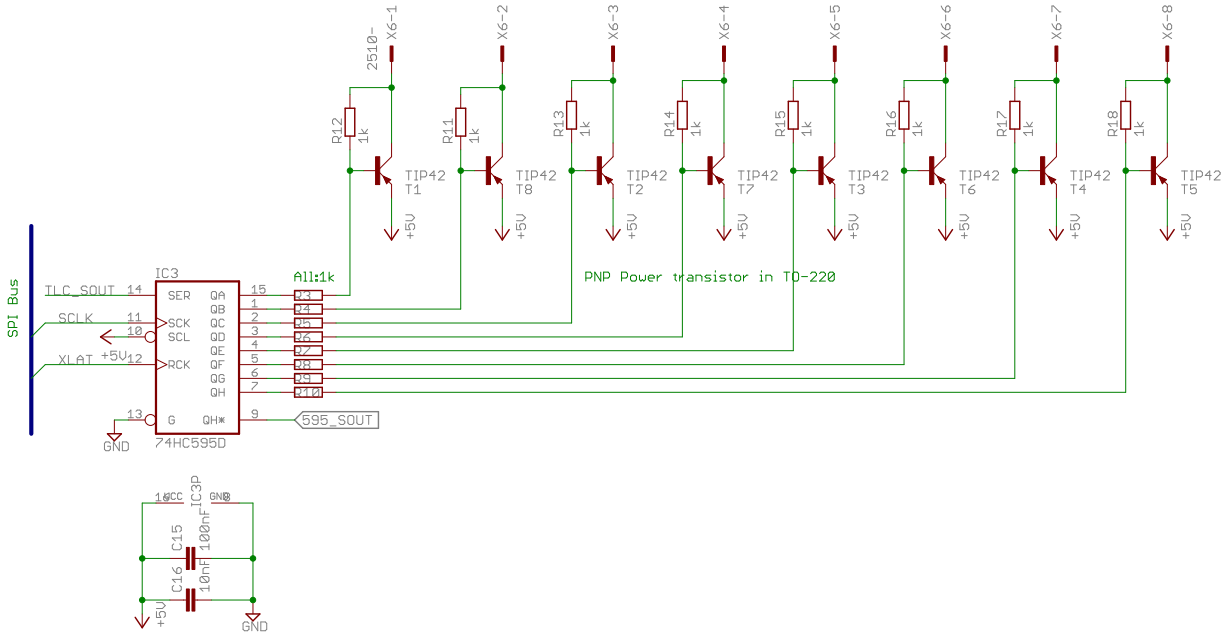

	ledikuutio
	5.9.2012 21:09:11
	Sheet: 2/3

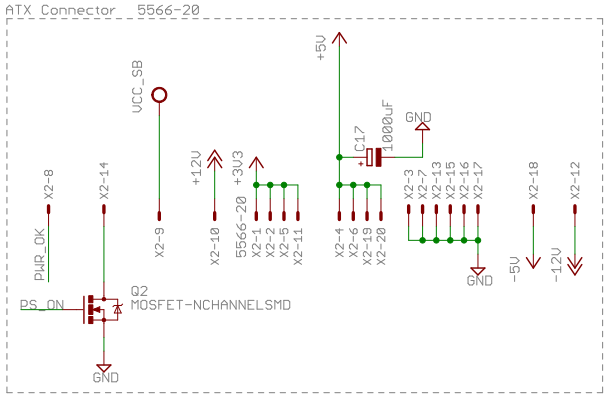

ledikuutio	
5.9.2012 21:09:11	
Sheet: 3/3	