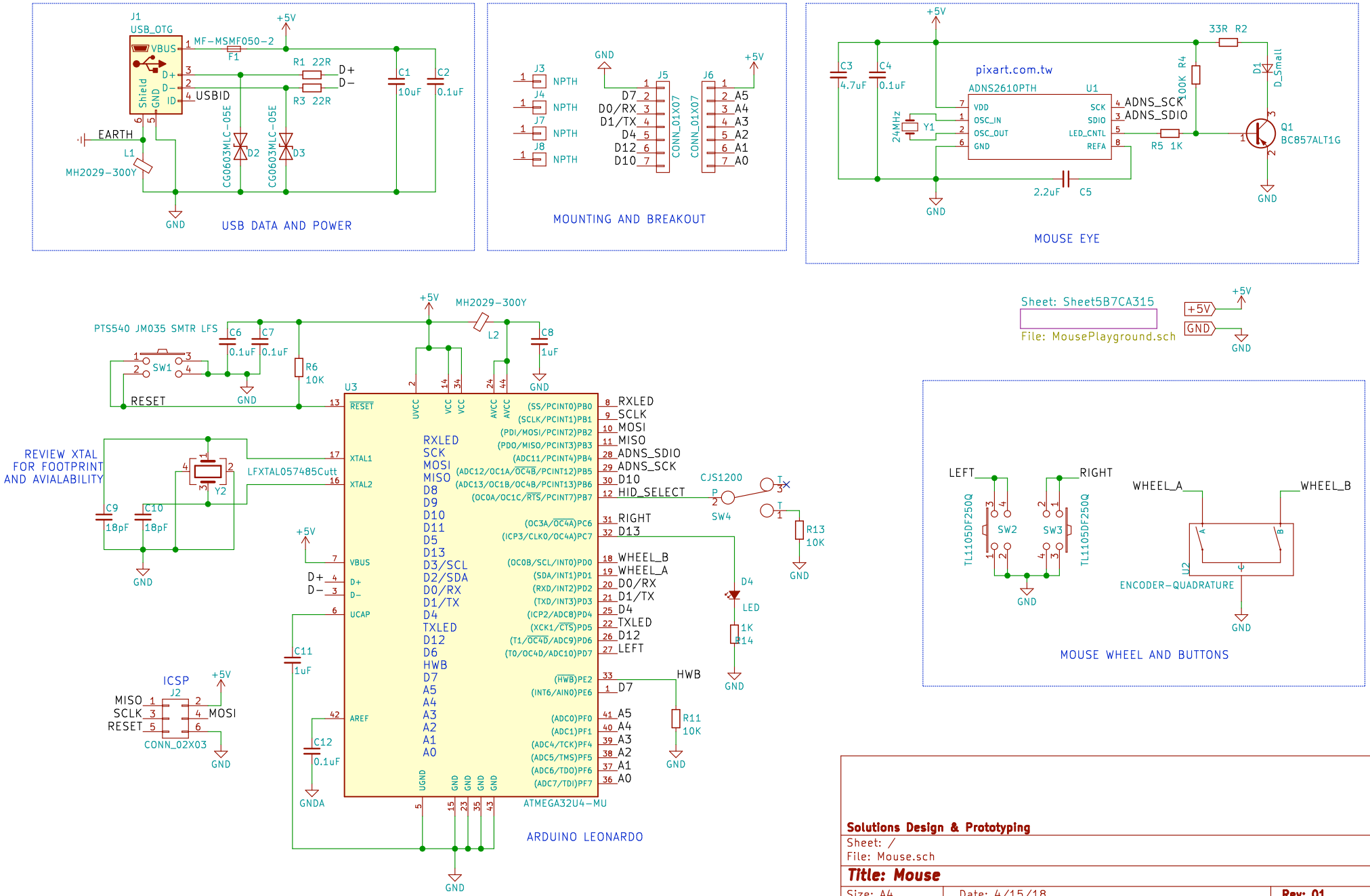


**Solutions Design & Prototyping**

Sheet: /
File: Mouse.sch

**Title: Mouse**

| | | |
|---|---|---|
| Size: A4 | Date: 4/15/18 | **Rev: 01** |
| KiCad E.D.A. kicad (5.1.4-0-10_14) | | Id: 1/2 |

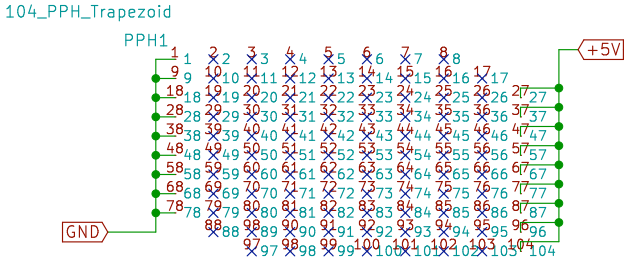


Sheet: /Sheet5B7CA315/
File: MousePlayground.sch

**Title:**

| Size: A4 | Date: | Rev: |
|---|---|---|
| KiCad E.D.A. kicad (5.1.4-0-10_14) | | Id: 2/2 |