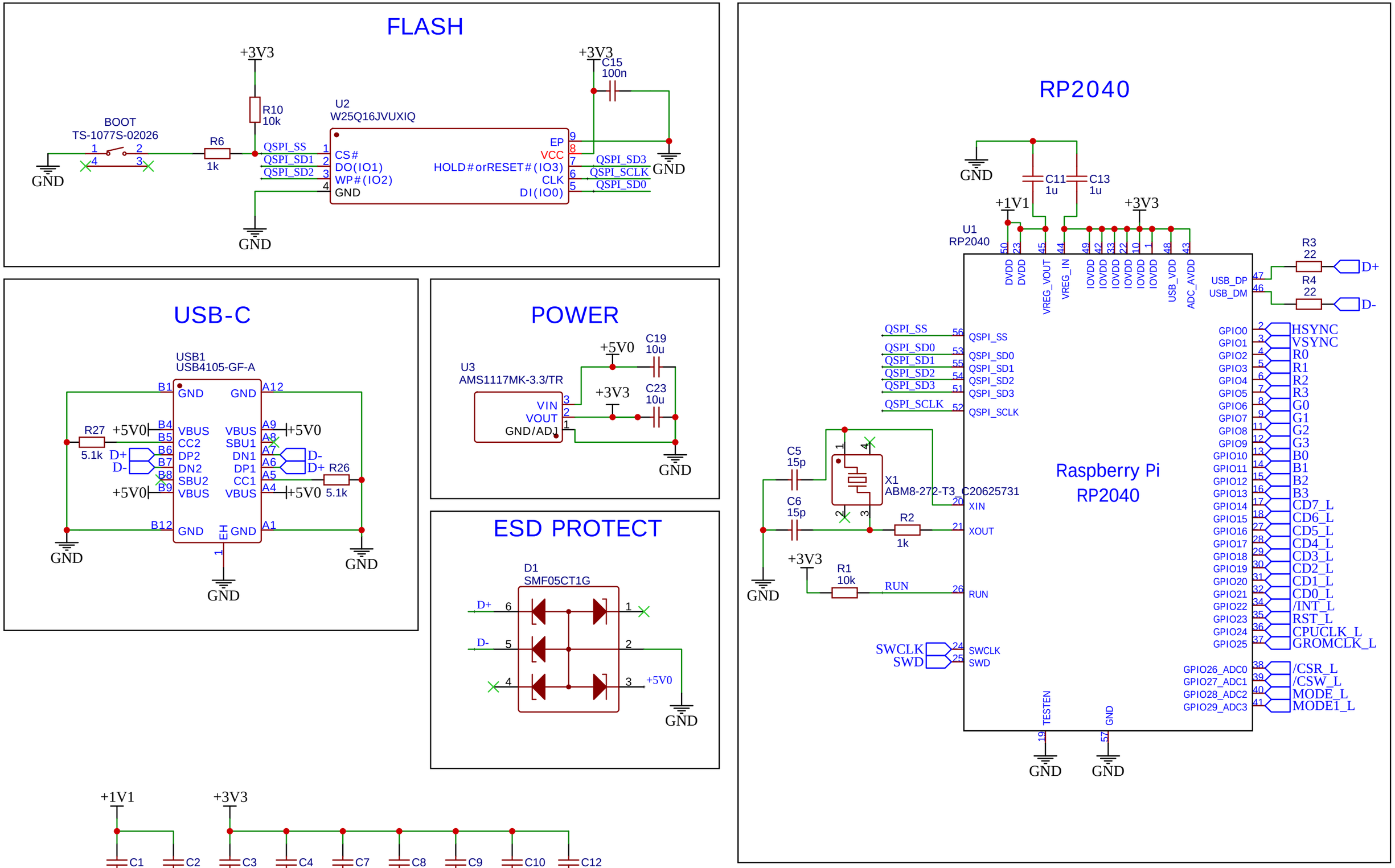

TITLE: PICO9918	REV: 1.1
Company: Troy Schrapel	Sheet: 1/2
Date: 2024-09-12 Drawn By: visrealm	

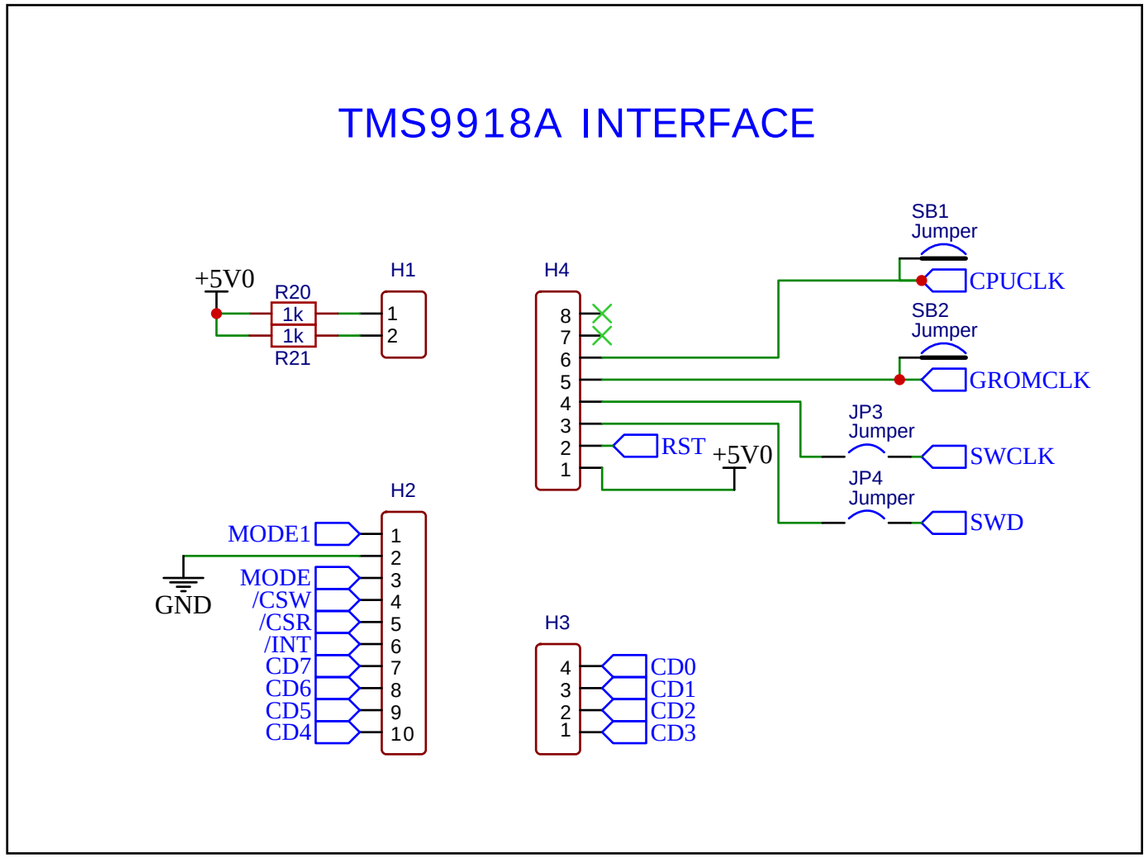

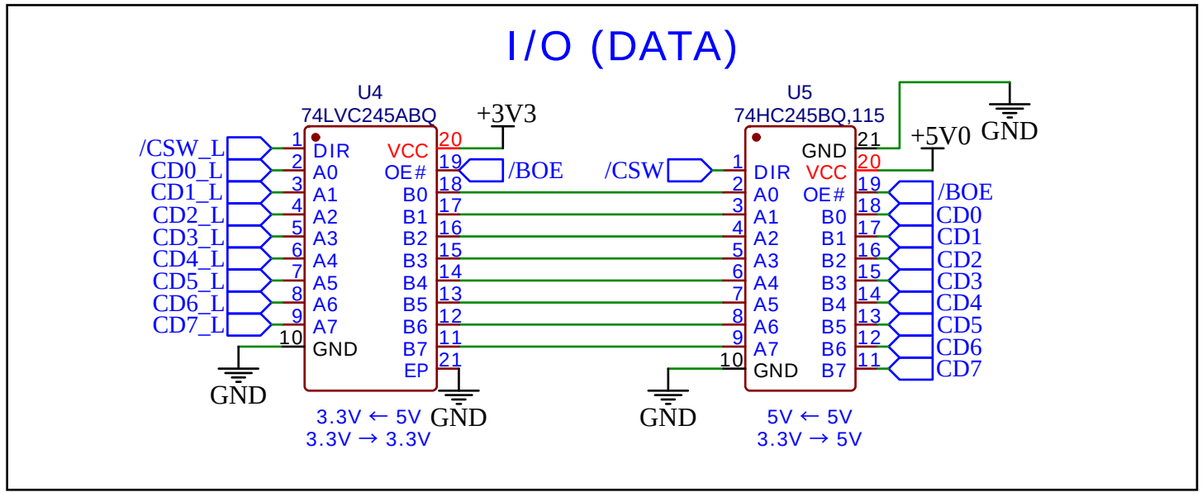

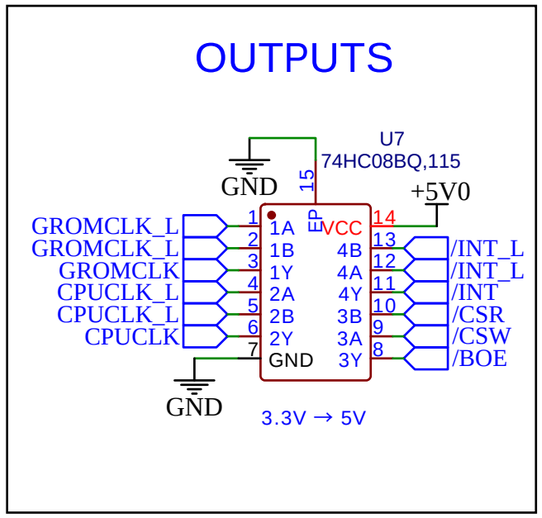

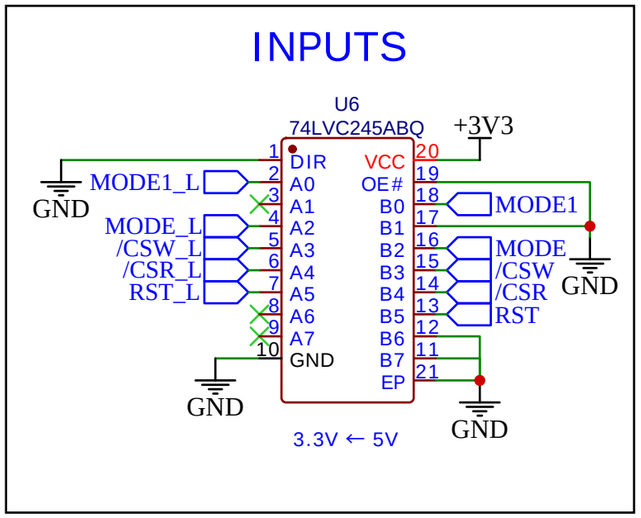

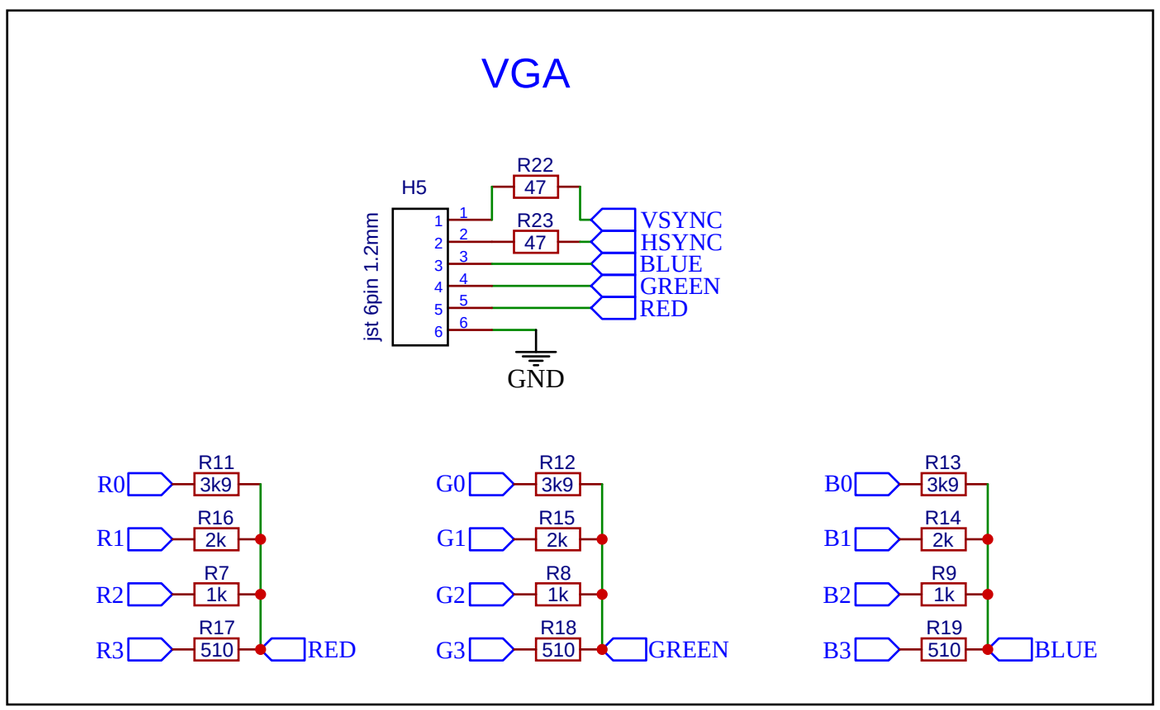

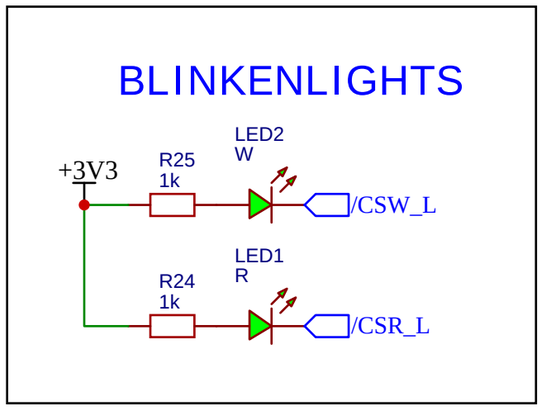

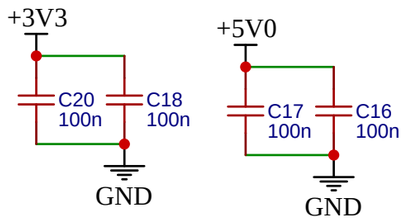

TITLE: PICO9918		REV: 1.1
	Company: Troy Schrapel	Sheet: 2/2
	Date: 2024-09-12 Drawn By: visrealm	