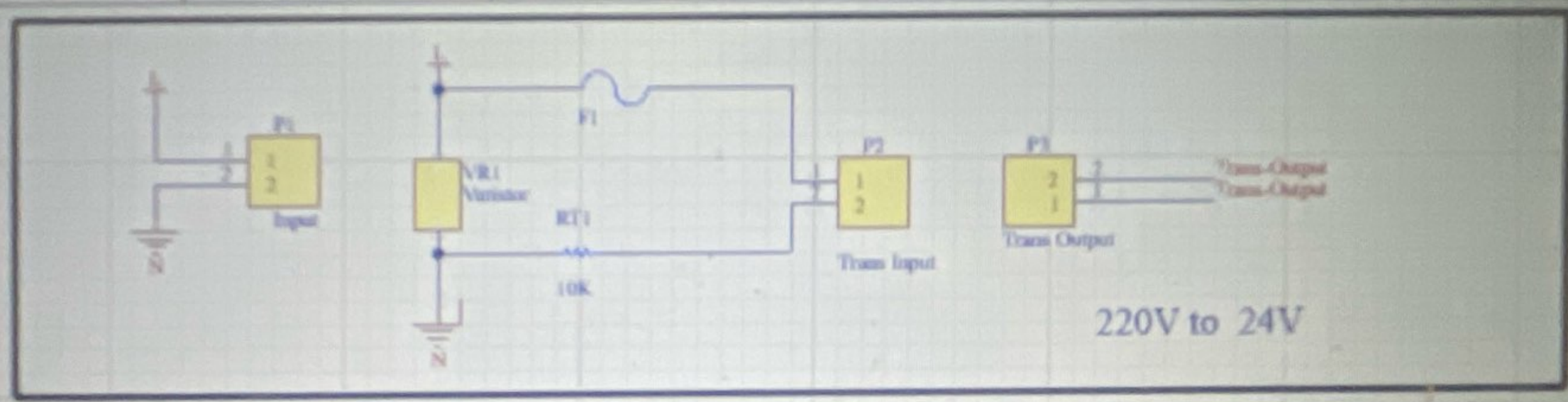
P1
Input
N
F1
VR1
Varistor
RT1
10K
N
P2
Trans Input
P3
Trans Output
Trans-Output
Trans-Output
220V to 24V

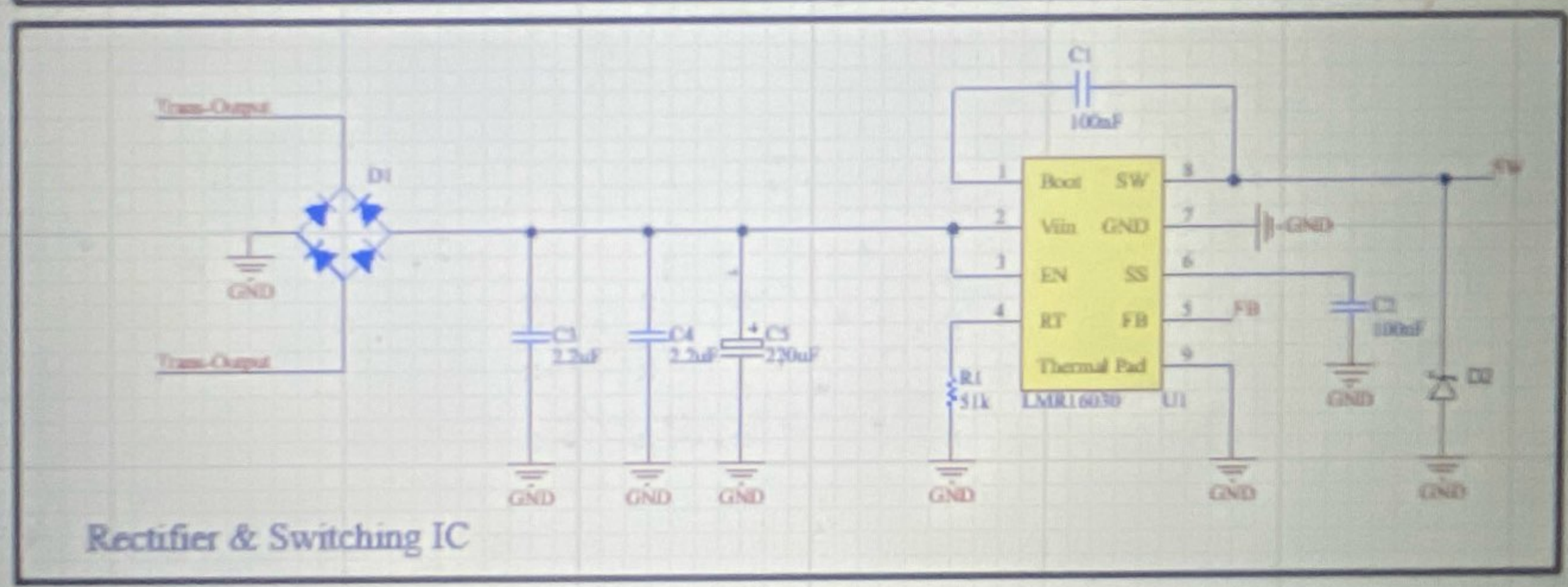
Trans-Output
D1
GND
Trans-Output
C3
2.2uF
C4
2.2uF
C5
220uF
GND
GND
GND
C1
100nF
Boot
SW
Vin
GND
EN
SS
RT
FB
Thermal Pad
R1
51k
LMR16030
U1
GND
GND
GND
GND
C2
100nF
GND
D2
GND
Rectifier & Switching IC

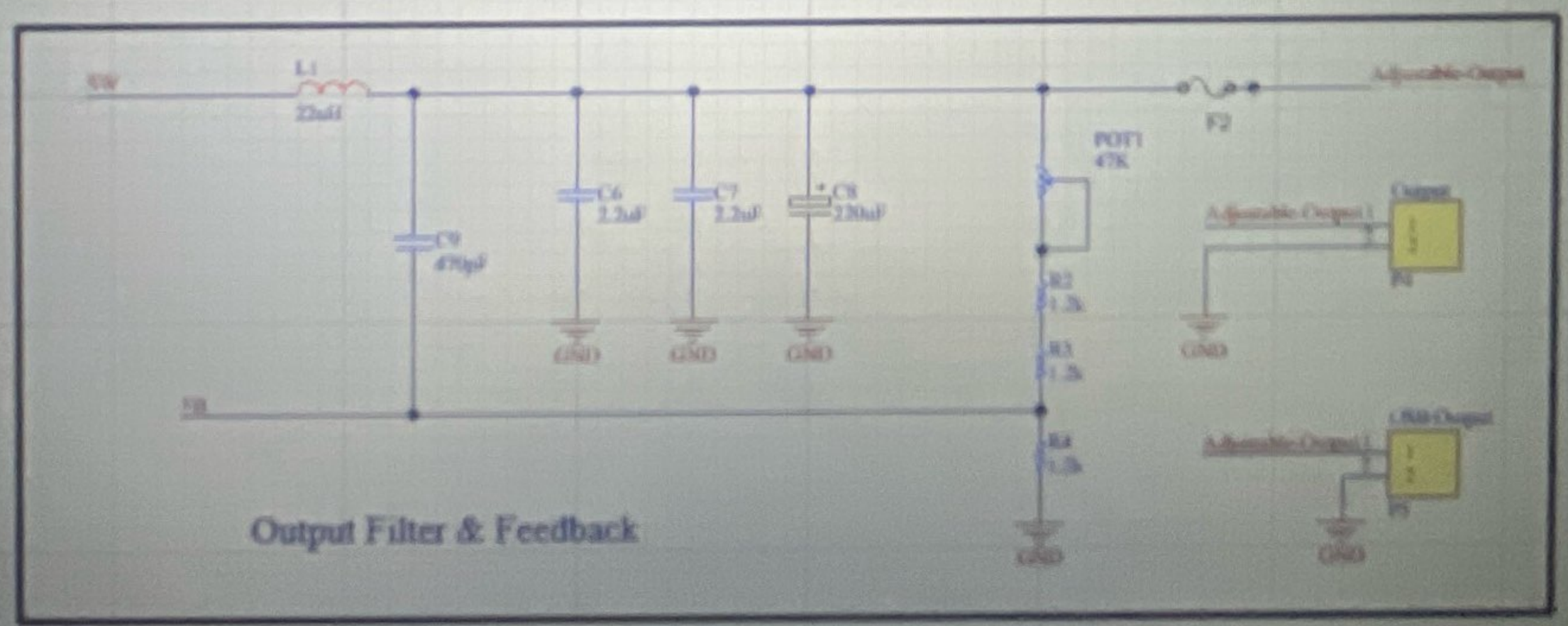
SW
L1
22uH
C9
470pF
C6
2.2uF
C7
2.2uF
C8
220uF
GND
GND
GND
FB
POT1
47K
R2
1.2k
R3
1.2k
R4
1.2k
GND
F2
Adjustable Output
Adjustable Output
Output
P4
GND
Adjustable Output
USB Output
P5
GND
Output Filter & Feedback

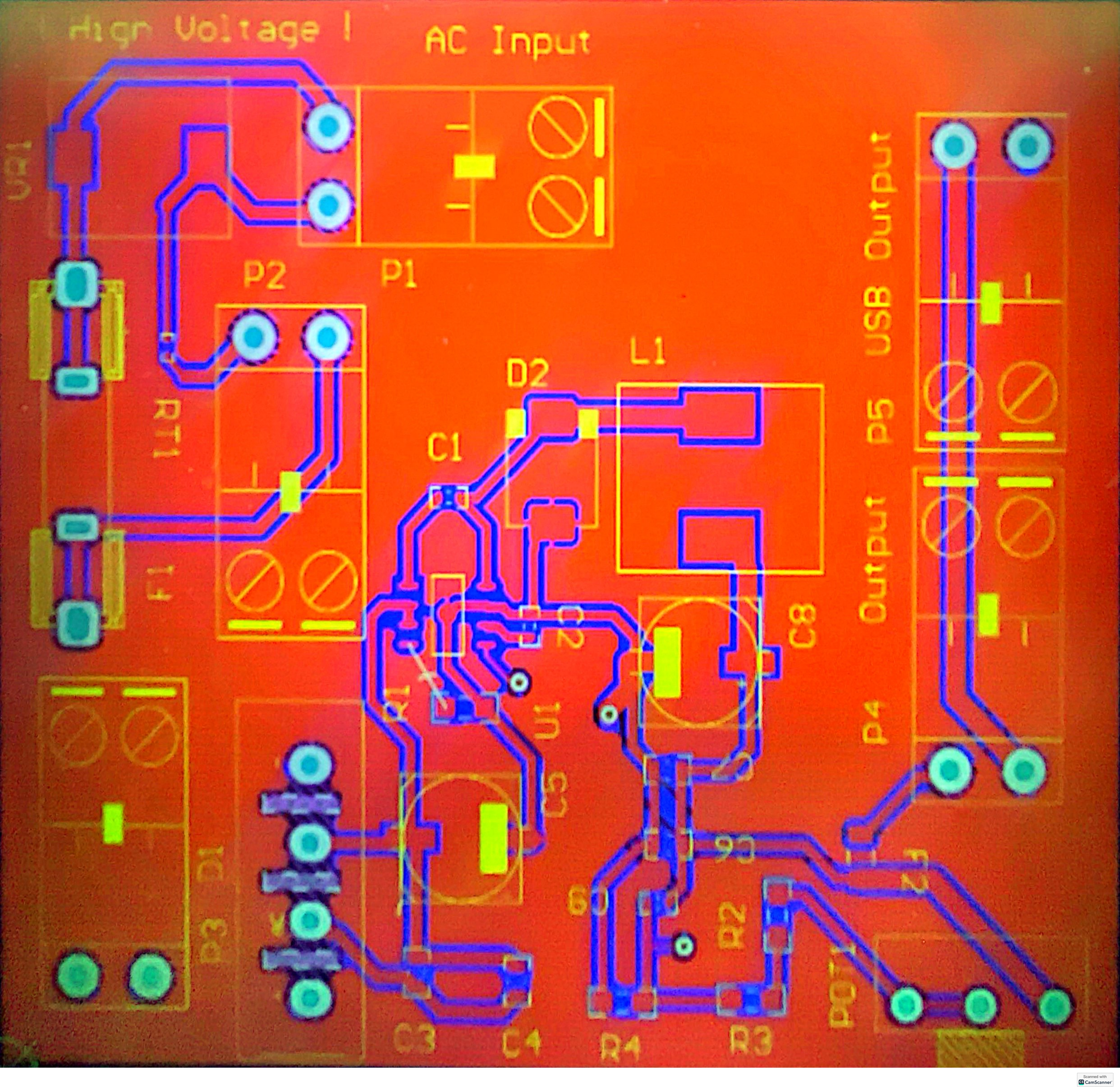
High Voltage
AC Input
P1
P2
RT1
F1
D2
L1
C1
C8
U1
C3
R1
R2
R3
R4
C4
P3
P4
P5
USB Output
Output

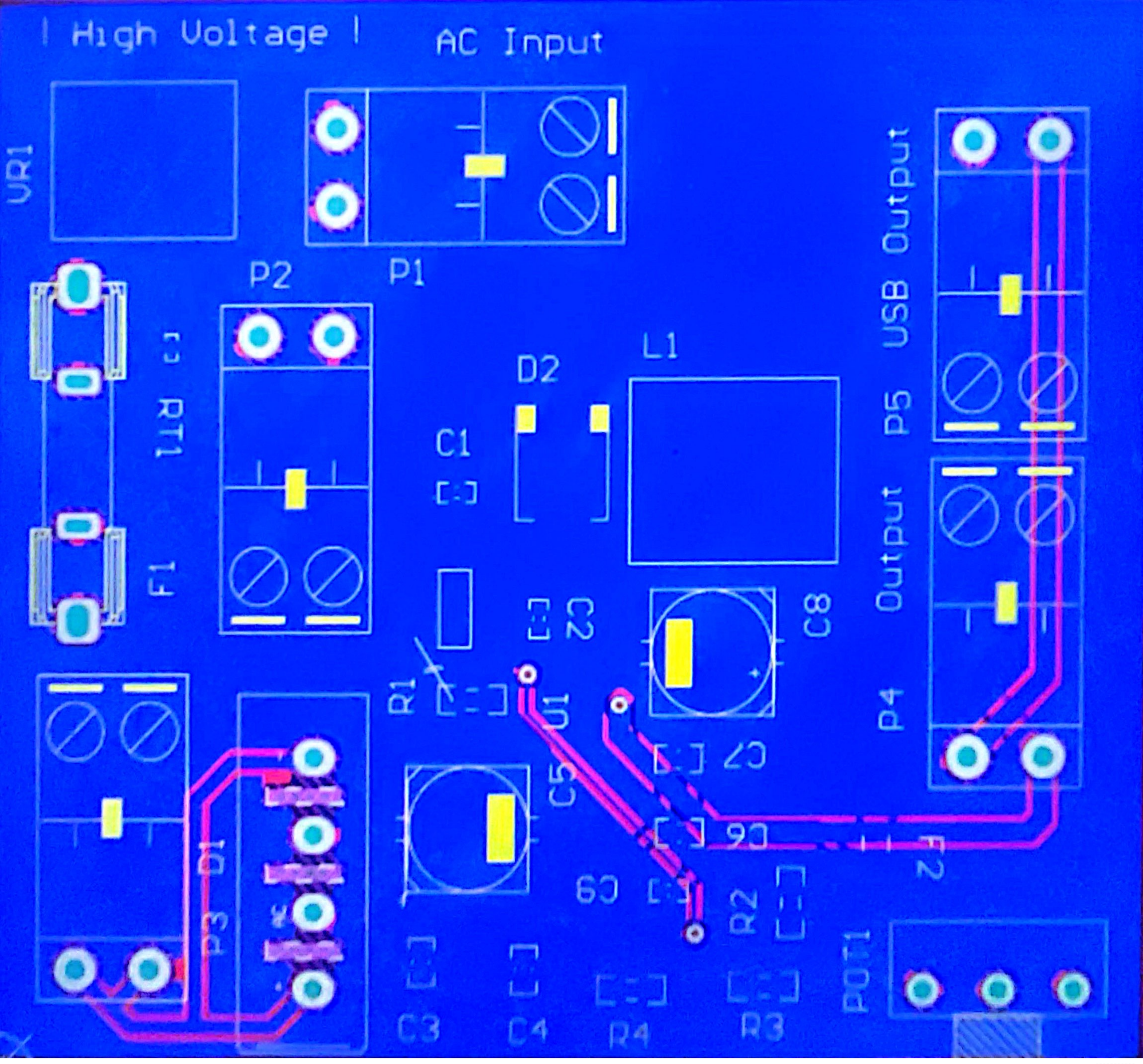
High Voltage
AC Input
VR1
P1
P2
RT1
F1
D2
L1
C1
C2
C8
R1
C5
C7
P5
USB Output
P4
Output
D1
C6
C9
R2
P3
C3
C4
R4
R3
RGB1

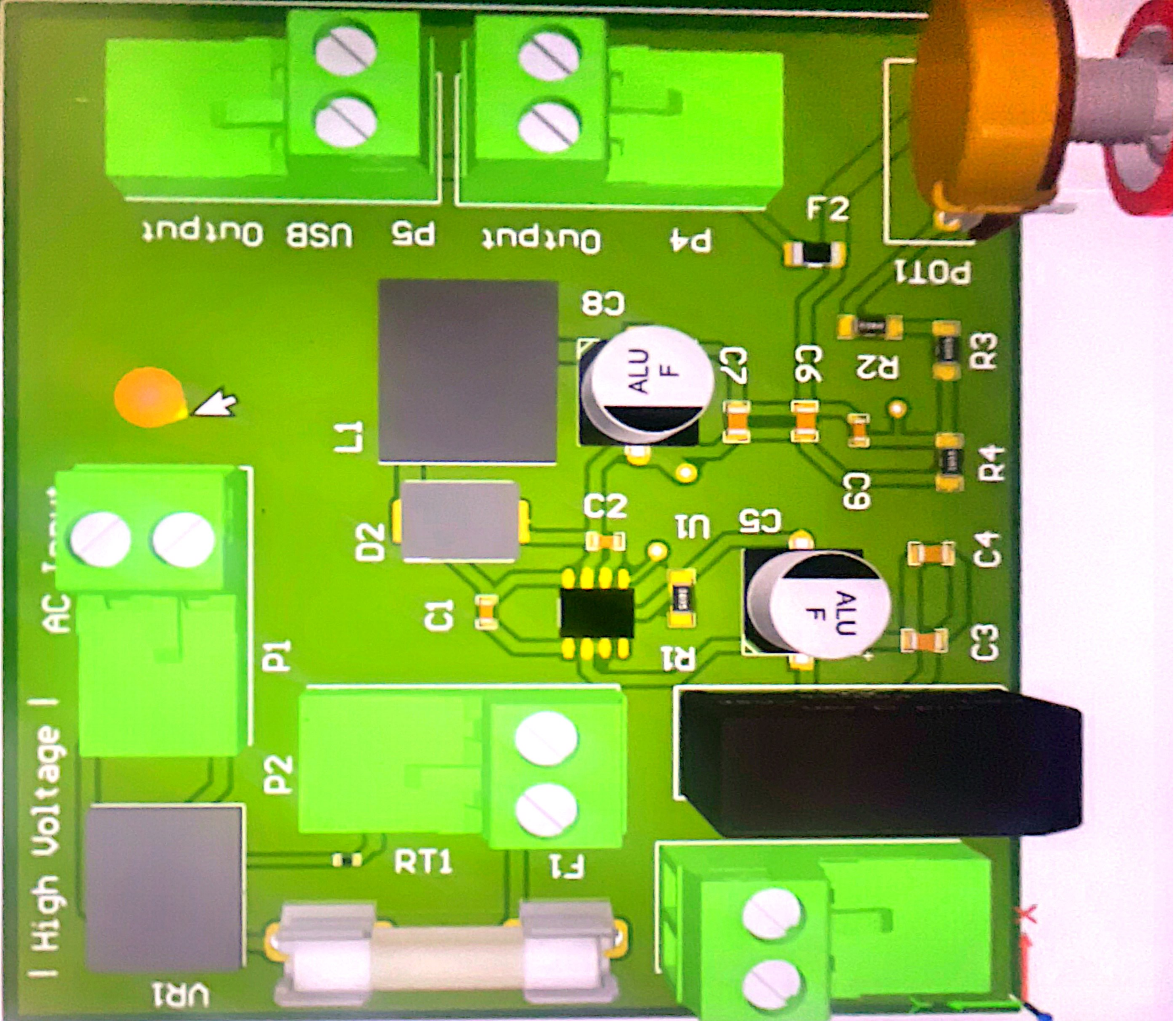
| High Voltage |
AC Input
P1
P2
VR1
RT1
F1
D2
L1
C1
C2
U1
R1
C5
C8
ALU
F
ALU
F
C3
C4
R4
C9
C6
C7
R2
R3
F2
POT1
P4
Output
P5
USB
Output