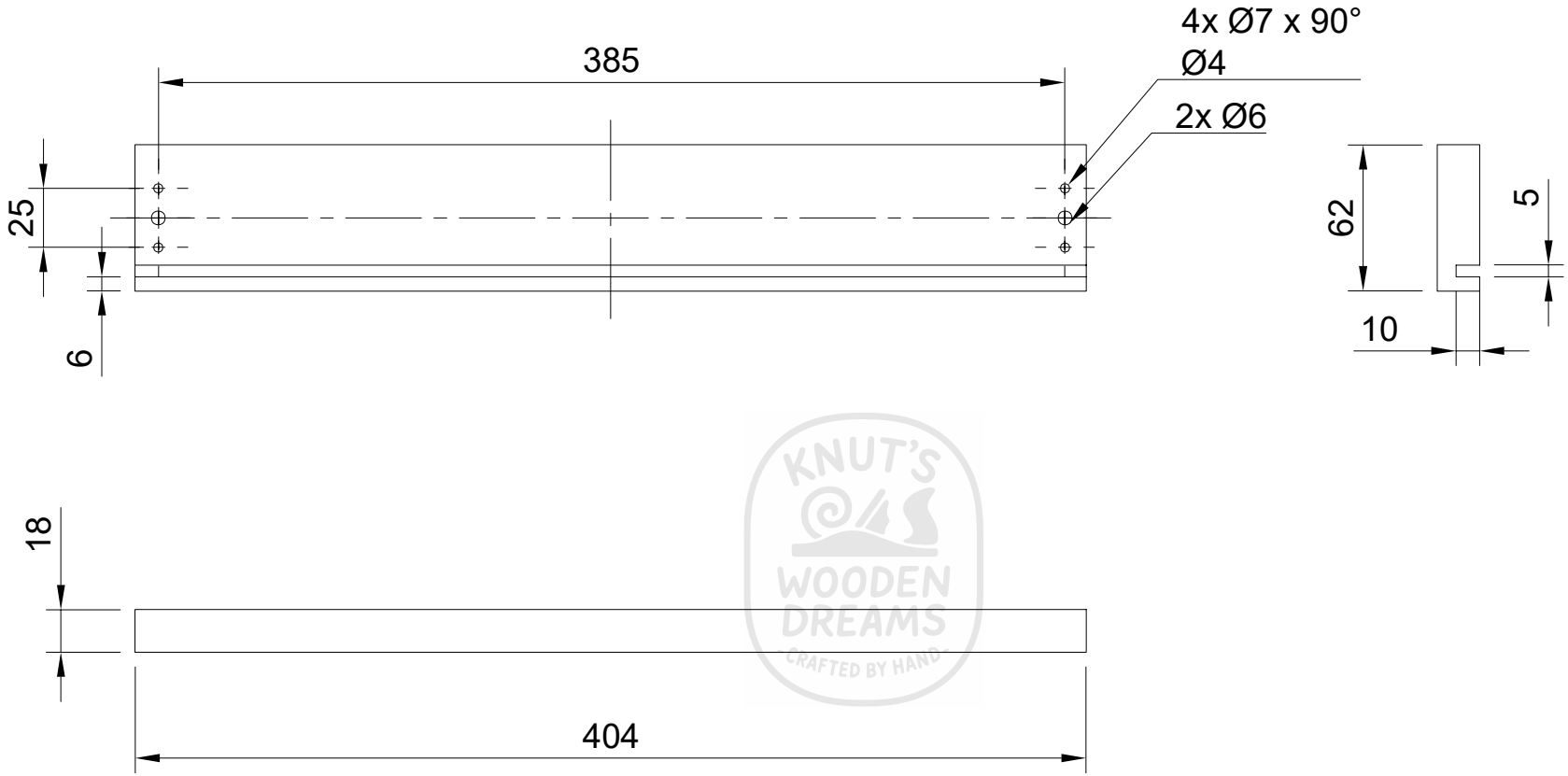

KNUT'S WOODEN DREAMS
CRAFTED BY HAND

Dept.	Technical reference	Created by Knut Welzel 03.04.2026	Approved by
		Document type	Document status
		Title **Schublade Front-Rückteil**	DWG No.
			Rev. / Date of issue / Sheet 1/1