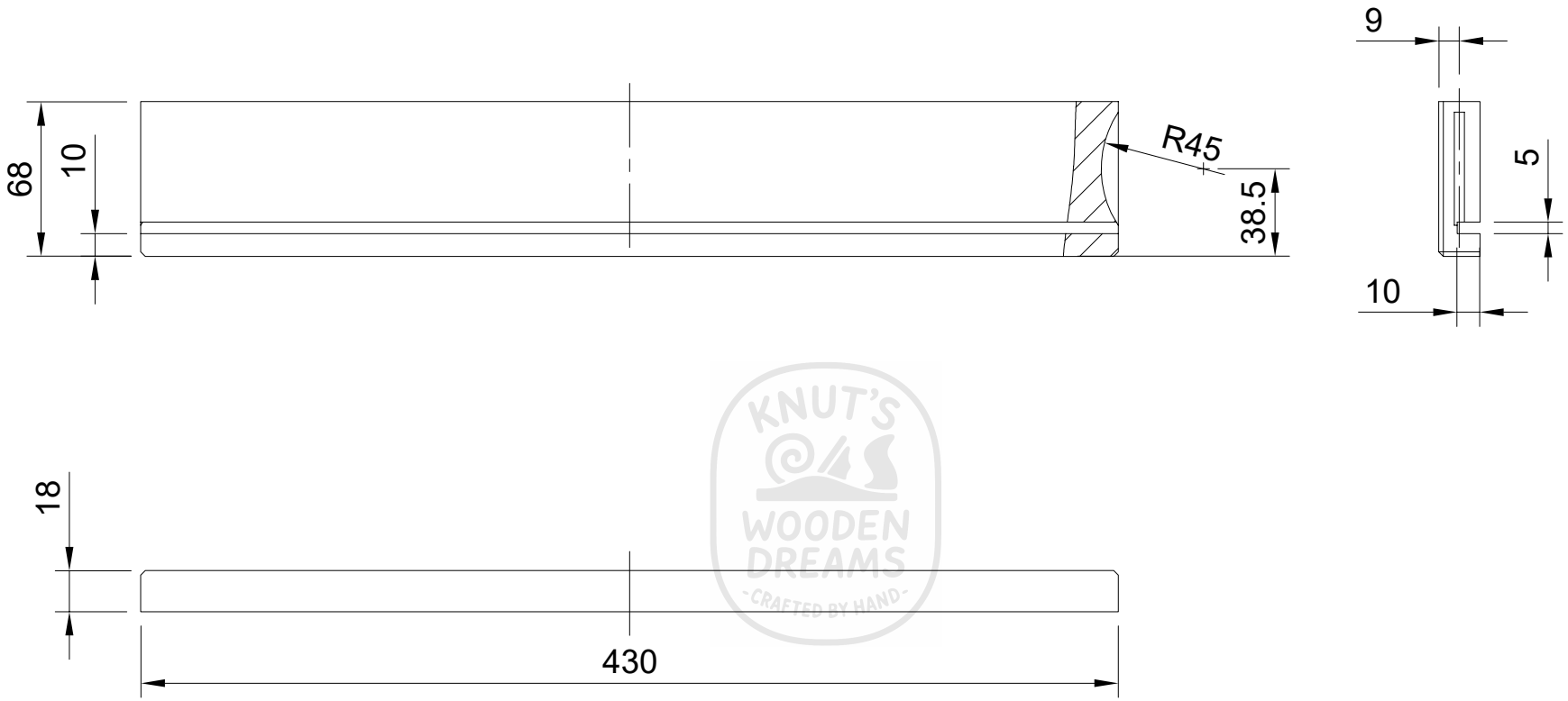

KNUT'S WOODEN DREAMS -CRAFTED BY HAND-

Dept.	Technical reference	Created by Knut Welzel 03.04.2026	Approved by		
		Document type	Document status		
		Title Schublade Rückteil	DWG No.		
			Rev.	Date of issue	Sheet 1/1