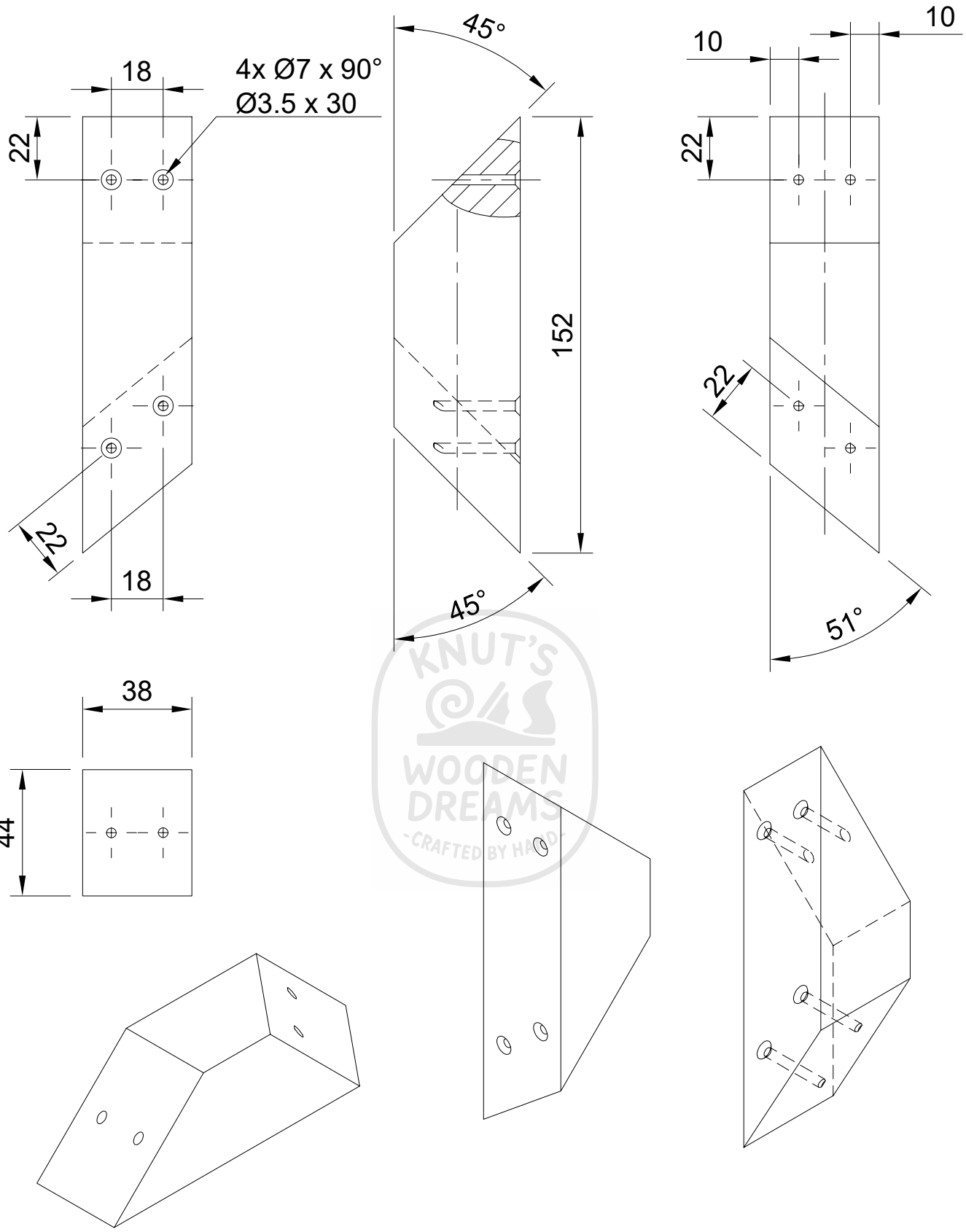

KNUT'S WOODEN DREAMS
-CRAFTED BY HAND-

Dept.	Technical reference	Created by	Approved by
		Knut Welzel 15.03.2025	
Kiefer: 152x44x44 Masse: 0.43 kg 1 Stück		Document type	Document status
		Title Winkel Strebe links	DWG No.
			Rev. / Date of issue / Sheet 13