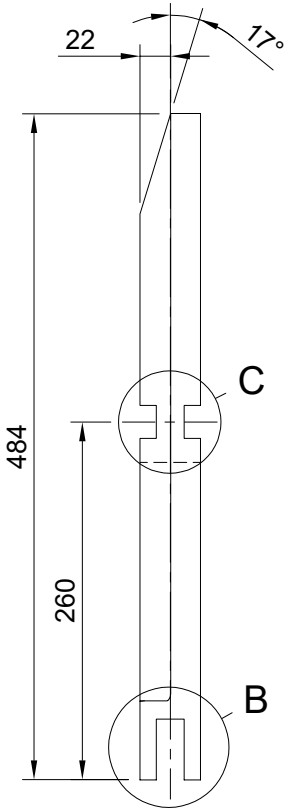

C (1:2)

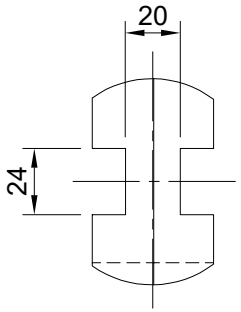

B (1:2)

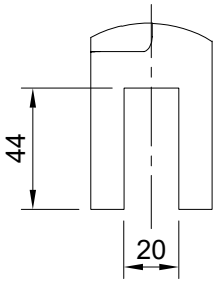

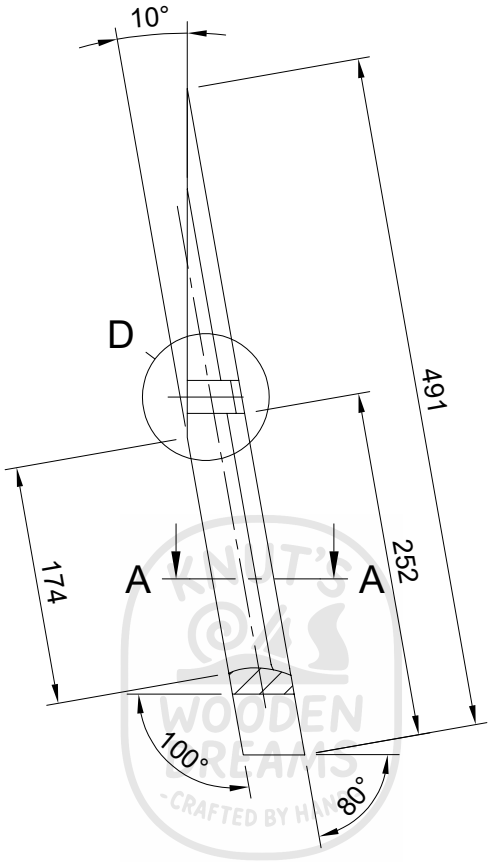

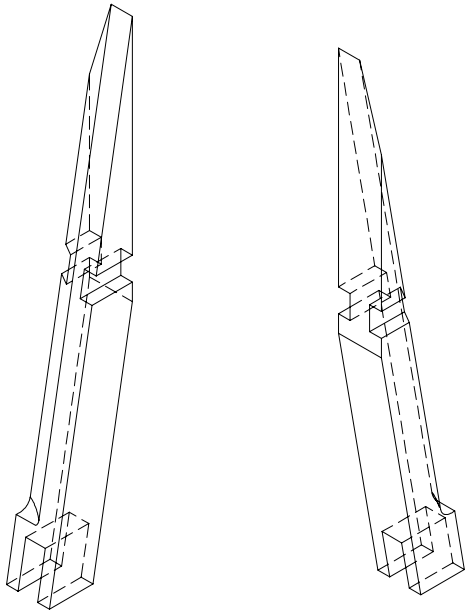

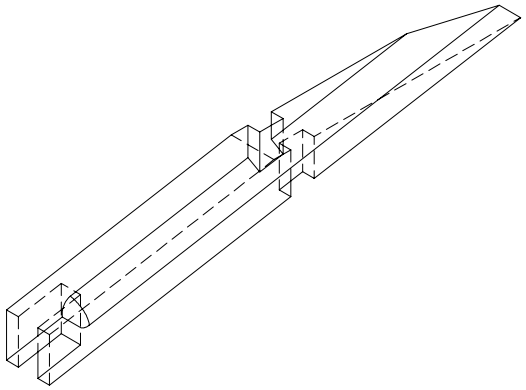

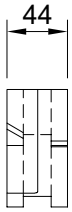

D (1:2)

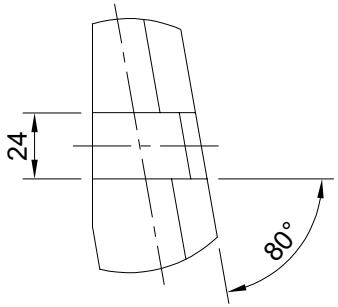

A-A (1:2)

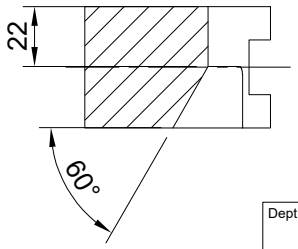

Dept.	Technical reference	Created by Knut Welzel 02.03.2025	Approved by
Kiefer: 492x44x44 Masse: 0.33 kg 1 Stück		Document type Title **Strebe Lehne rechts**	Document status DWG No. Rev. / Date of issue / Sheet 18