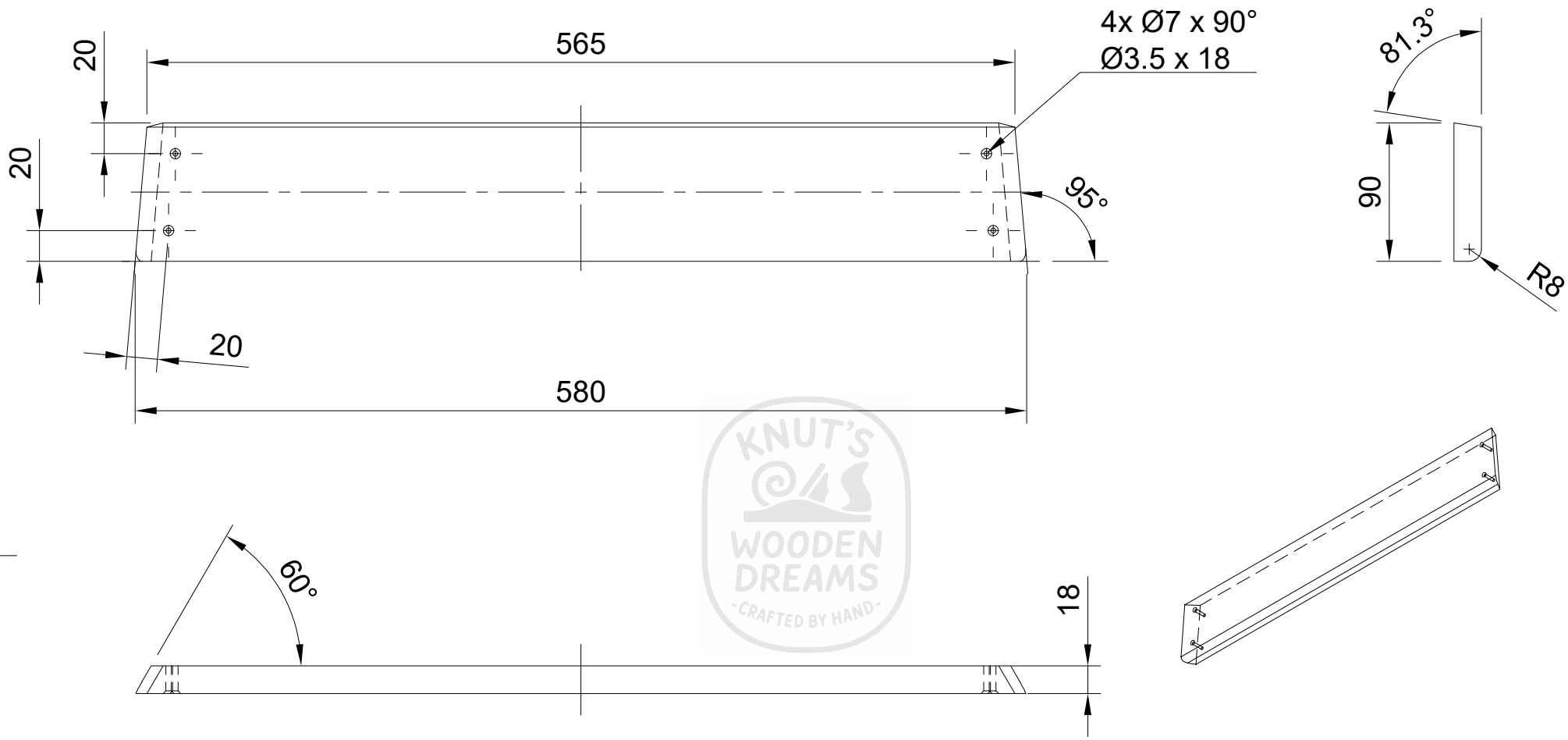

KNUT'S WOODEN DREAMS -CRAFTED BY HAND-

Dept.	Technical reference	Created by Knut Welzel 14.01.2025	Approved by
Kiefer: 581x90x18 Masse: 0.51 kg 1 Stück		Document type	Document status
		Title Brett Lehne 1	DWG No.
			Rev. / Date of issue / Sheet 23