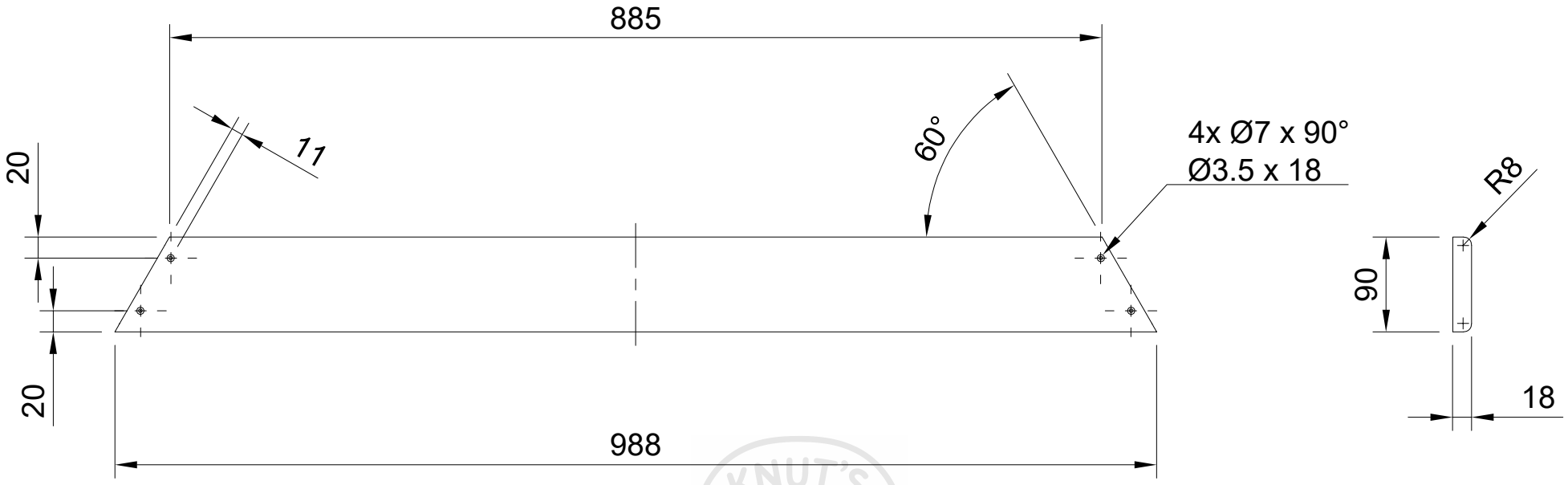


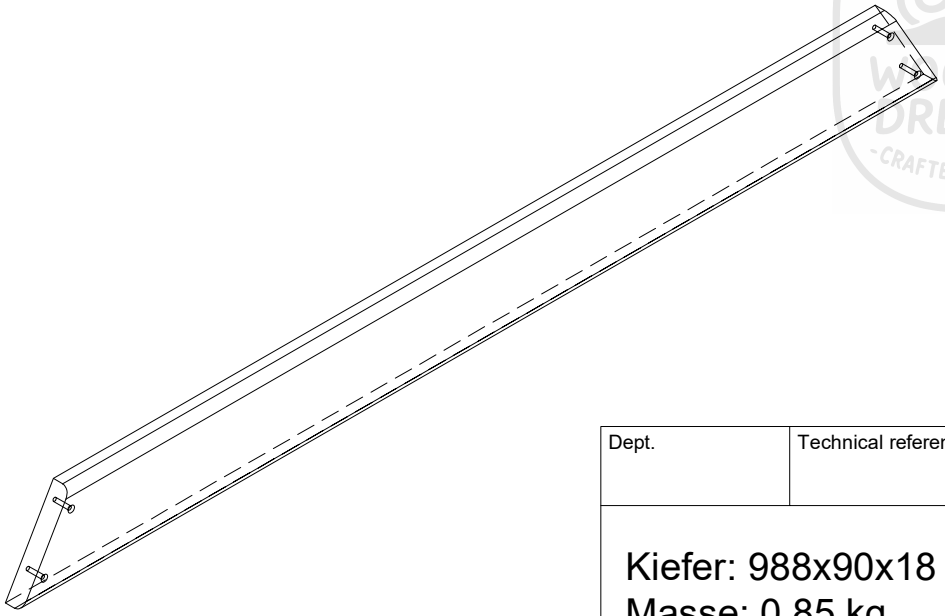

KNUT'S WOODEN DREAMS -CRAFTED BY HAND-

| Dept. | Technical reference | Created by<br>Knut Welzel 02.03.2025 | Approved by |
|---|---|---|---|
| Kiefer: 988x90x18<br>Masse: 0.85 kg<br><br>1 Stück | | Document type | Document status |
| | | Title<br>Brett Sitz 3 | DWG No. |
| | | | Rev. / Date of issue / Sheet 41 |