Teileliste				
Element	Anz.	Bauteilnummer	Beschreibung	Material
1	2	Bein	812x54x54; 14612119	Kiefer
2	1	Seitenplatte links	800x250x18; 23141003; 1St; 800x300x18; 23141012; 1St	Kiefer
3	5	TSS4613SC-400	B09J18JV1P	Stahl
4	15	Stahlia B0C7ZJ6NY1	B0C7ZJ6NY1	Stahl

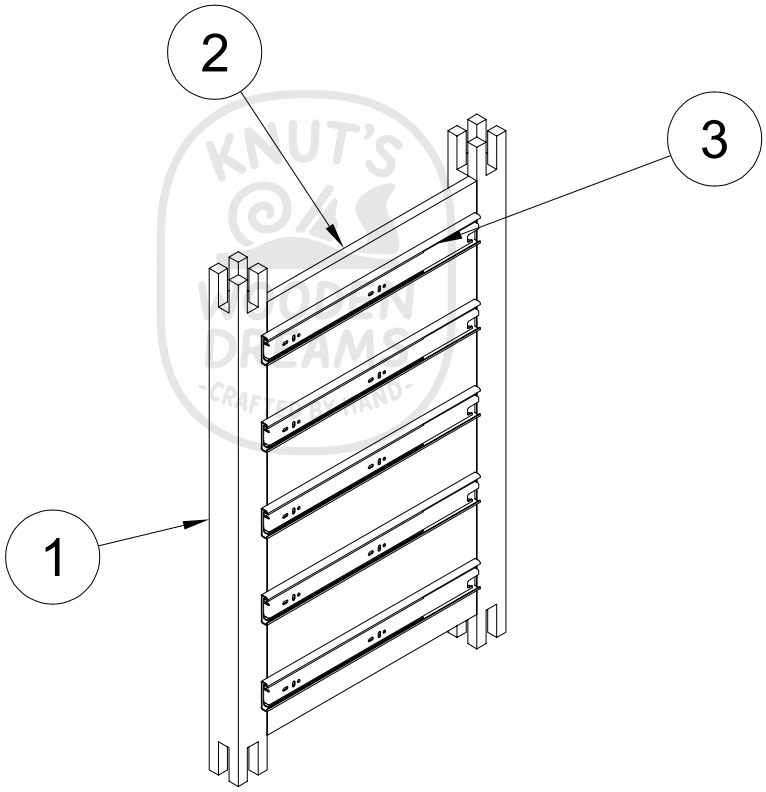

Dept.	Technical reference	Created by Knut Welzel 17.01.2024	Approved by	
		Document type	Document status	
		Title **Standardtisch Beine links**	DWG No.	
			Rev. / Date of issue	Sheet 3