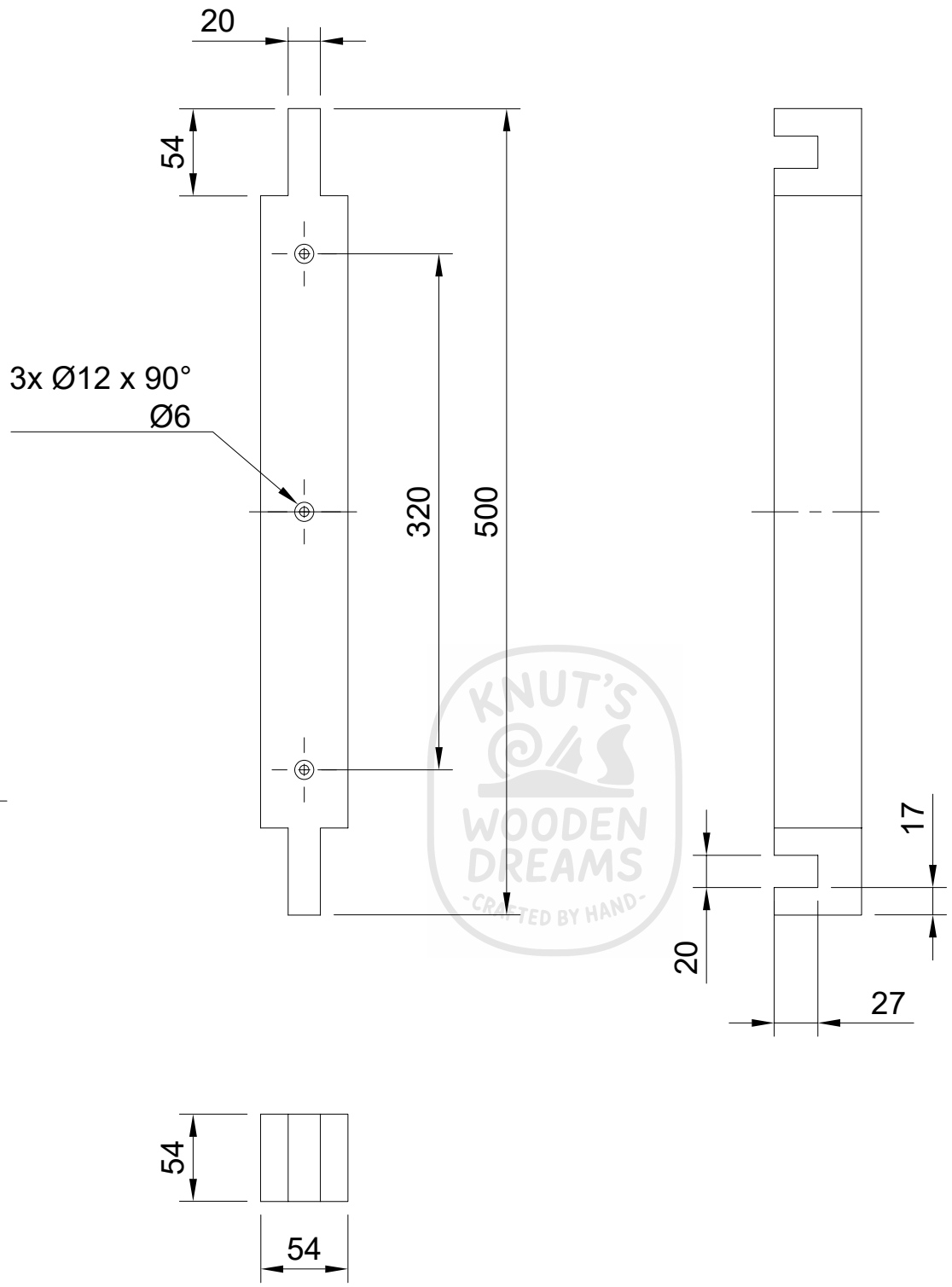

KNUT'S WOODEN DREAMS -CRAFTED BY HAND-

Dept.	Technical reference	Created by Knut Welzel 16.01.2024	Approved by	
		Document type	Document status	
		Title **Rahmen seite oben**	DWG No.	
			Rev. / Date of issue	Sheet 13