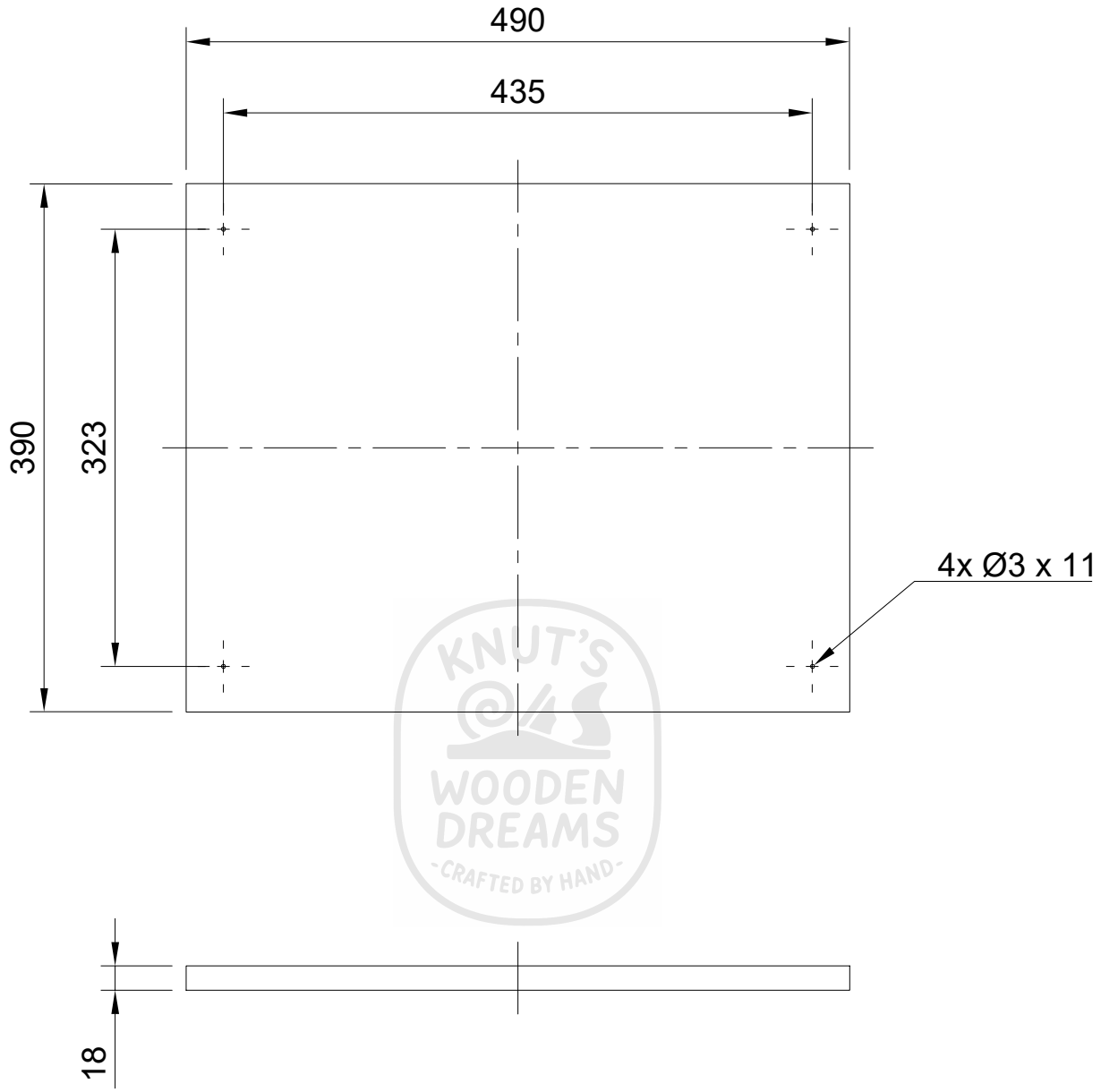

KNUT'S WOODEN DREAMS -CRAFTED BY HAND-

Dept.	Technical reference	Created by Knut Welzel 16.01.2024	Approved by
		Document type	Document status
		Title Bodenplatte	DWG No.
			Rev. / Date of issue / Sheet 1/1