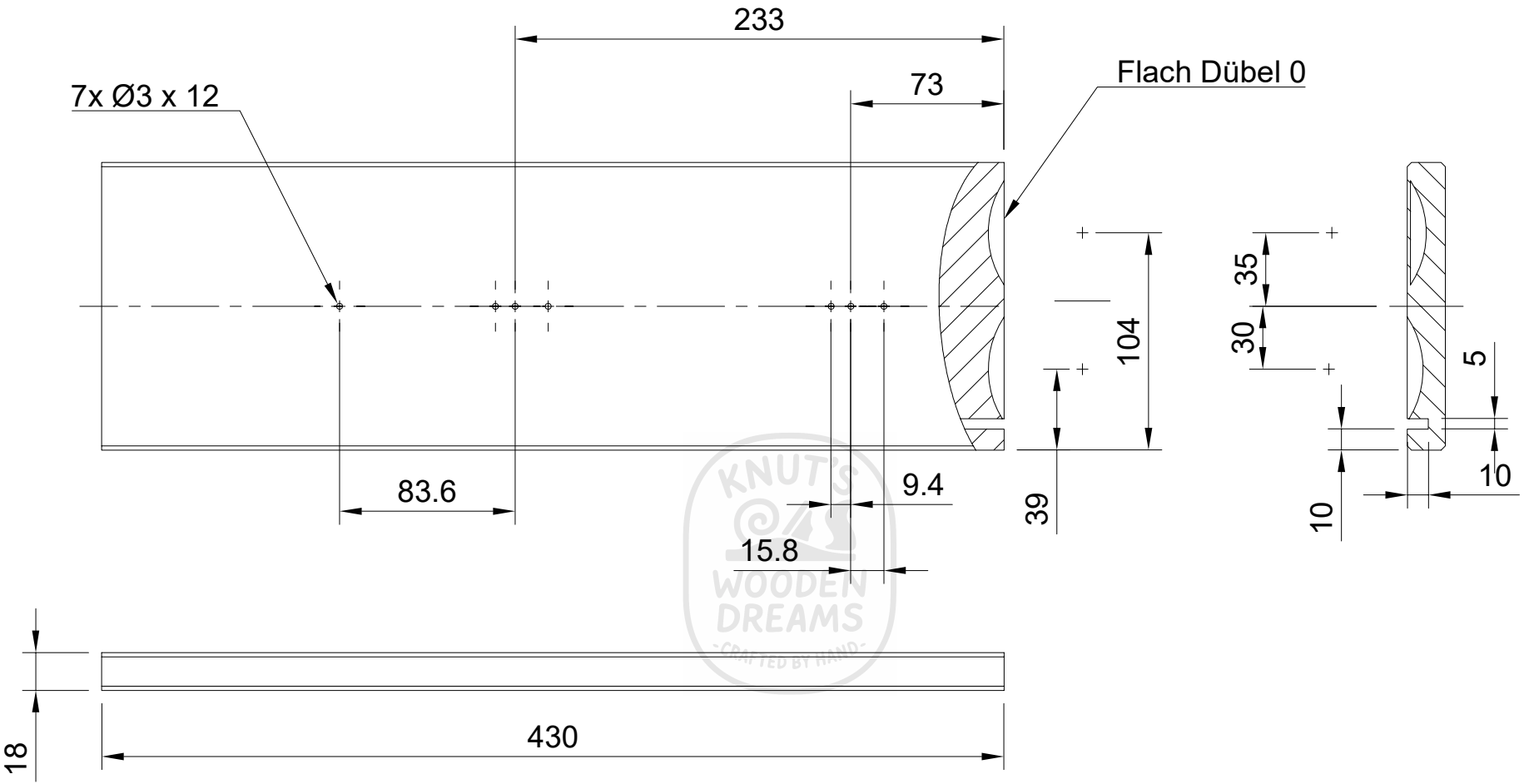


KNUT'S WOODEN DREAMS
CRAFTED BY HAND

| Dept. | Technical reference | Created by<br>Knut Welzel 16.01.2024 | Approved by |
|---|---|---|---|
| | | Document type | Document status |
| | | Title<br>**Schublade Seite links** | DWG No. |
| | | | Rev. / Date of issue / Sheet 33 |