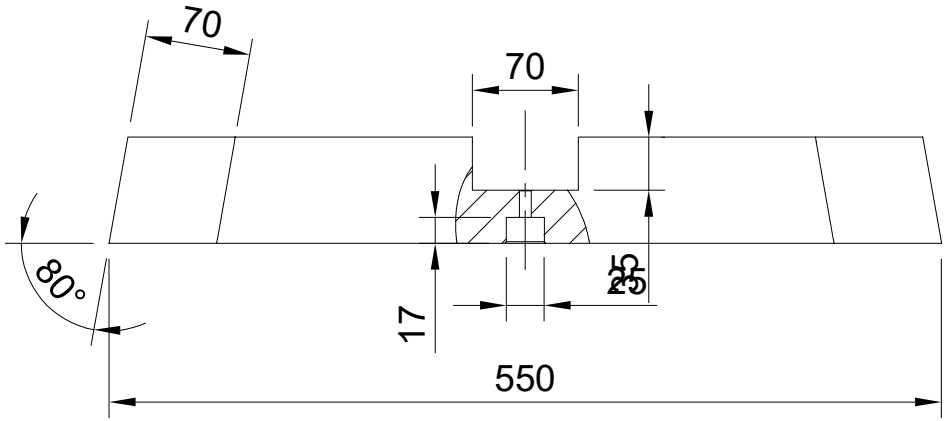


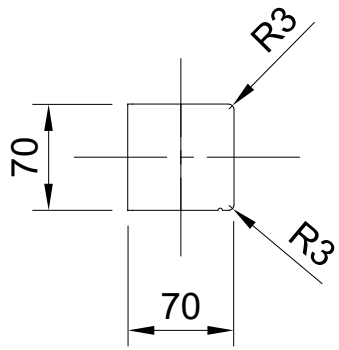


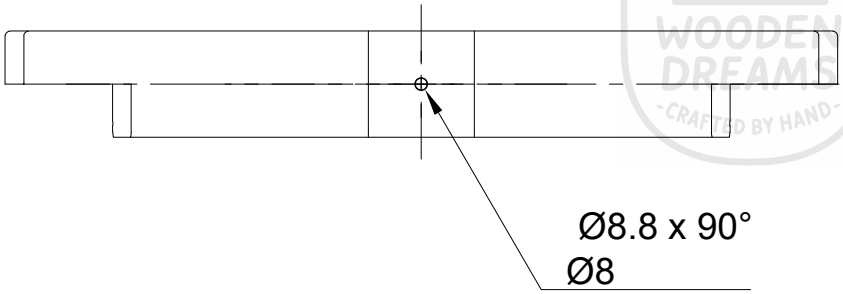


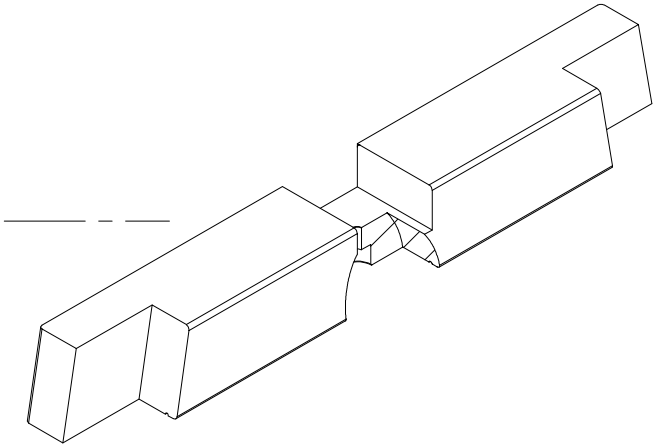

KNUT'S WOODEN DREAMS -CRAFTED BY HAND-

| Dept. | Technical reference | Created by<br>Knut Welzel 27.12.2025 | Approved by | |
|---|---|---|---|---|
| | | Document type | Document status | |
| | | Title<br>**Strebebein kurz unten** | DWG No. | |
| | | | Rev. / Date of issue | Sheet<br>1/1 |