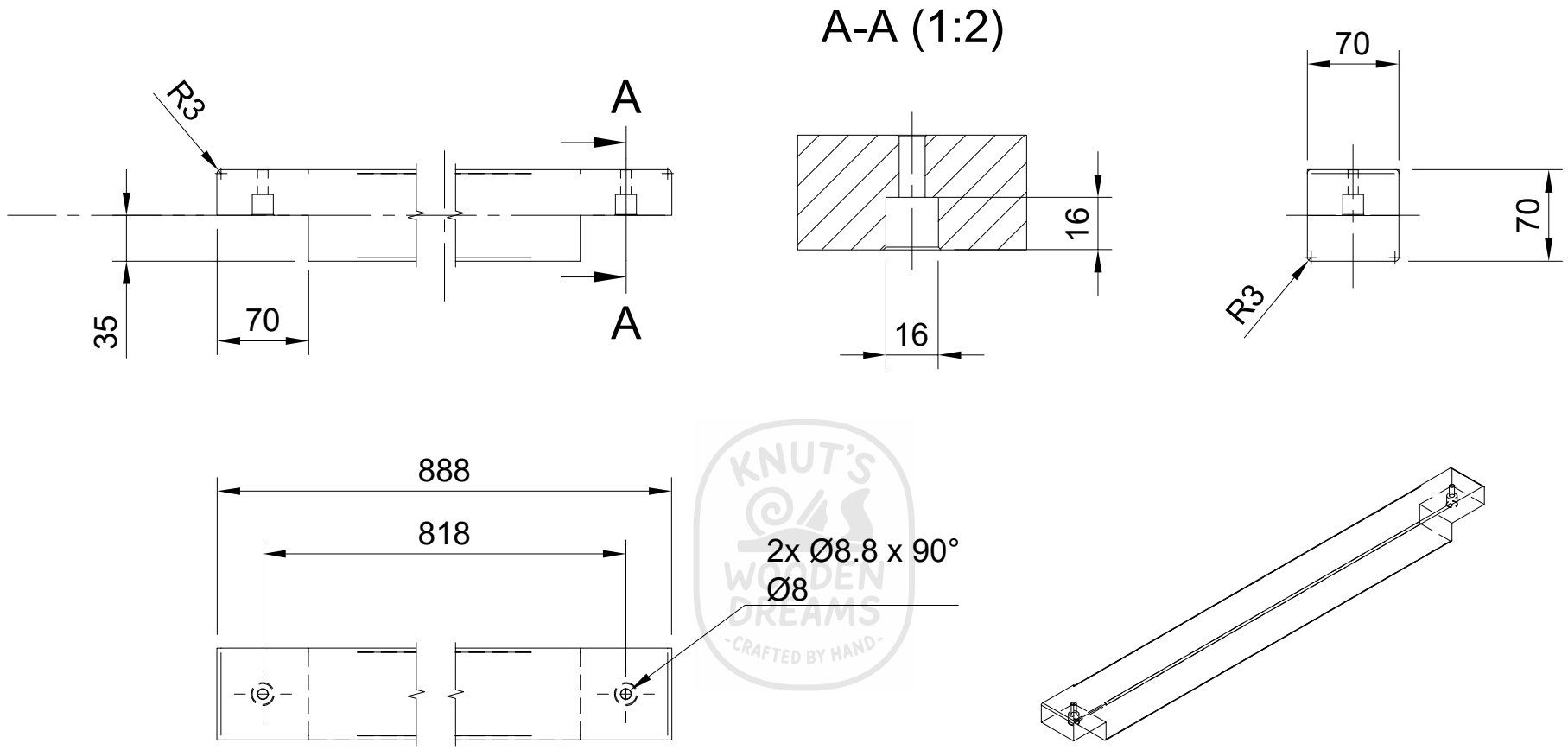

KNUT'S WOODEN DREAMS -CRAFTED BY HAND-

Dept.	Technical reference	Created by Knut Welzel 27.12.2025	Approved by	
		Document type	Document status	
		Title **Strebebein lang oben**	DWG No.	
			Rev. / Date of issue	Sheet 1/1