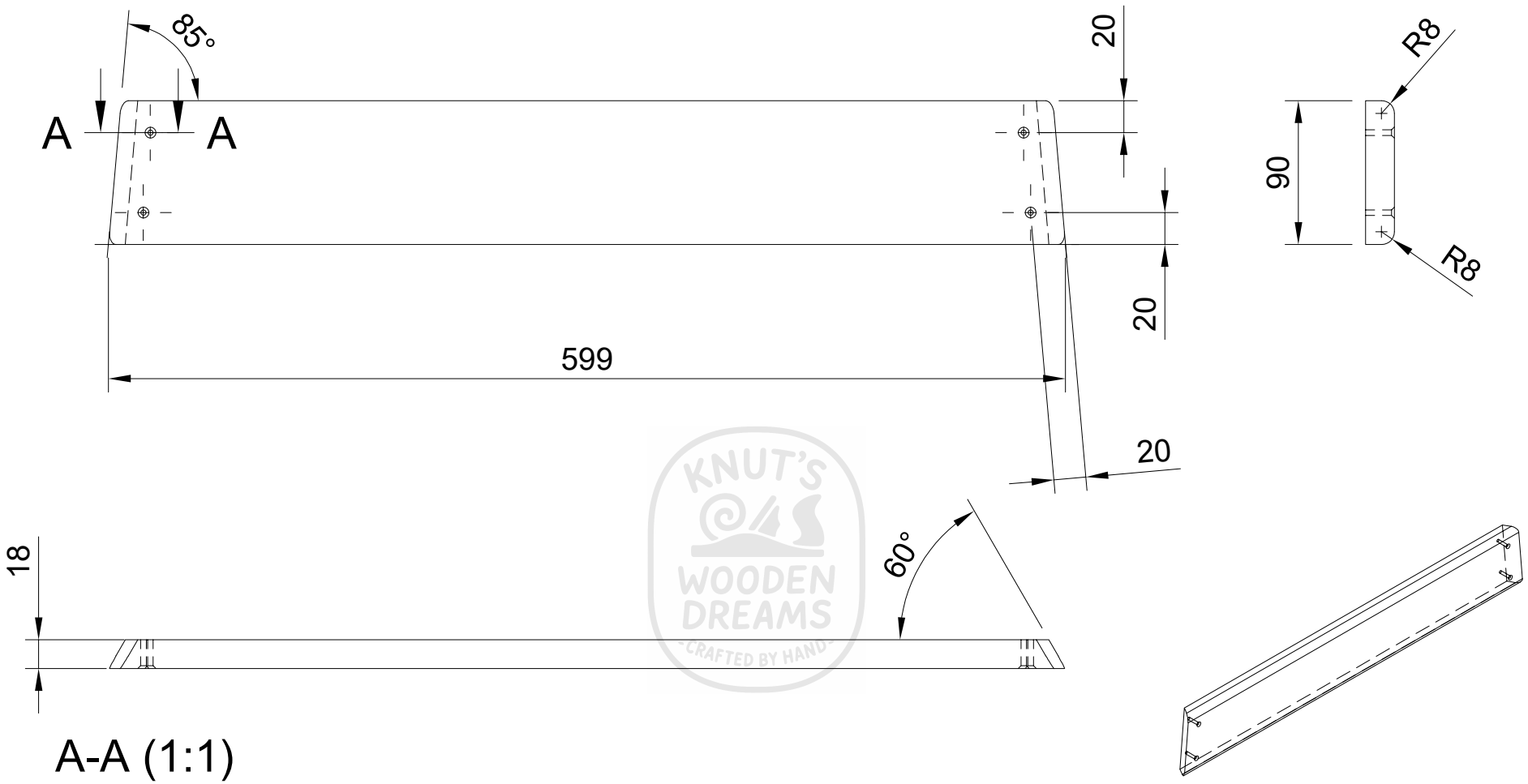

A-A (1:1)

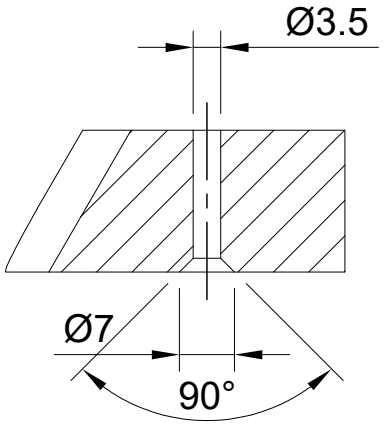

Dept.	Technical reference	Created by Knut Welzel 02.03.2025	Approved by
Kiefer: 600x90x18 Masse: 526.852 g 1 Stück		Document type	Document status
		Title **Brett Lehne 2 rechts**	DWG No.
			Rev. / Date of issue / Sheet 32