Teileliste		
Element	Anz.	Bauteilnummer
1	1	Standardtisch Beine
2	1	Tischplatte
3	5	Schublade

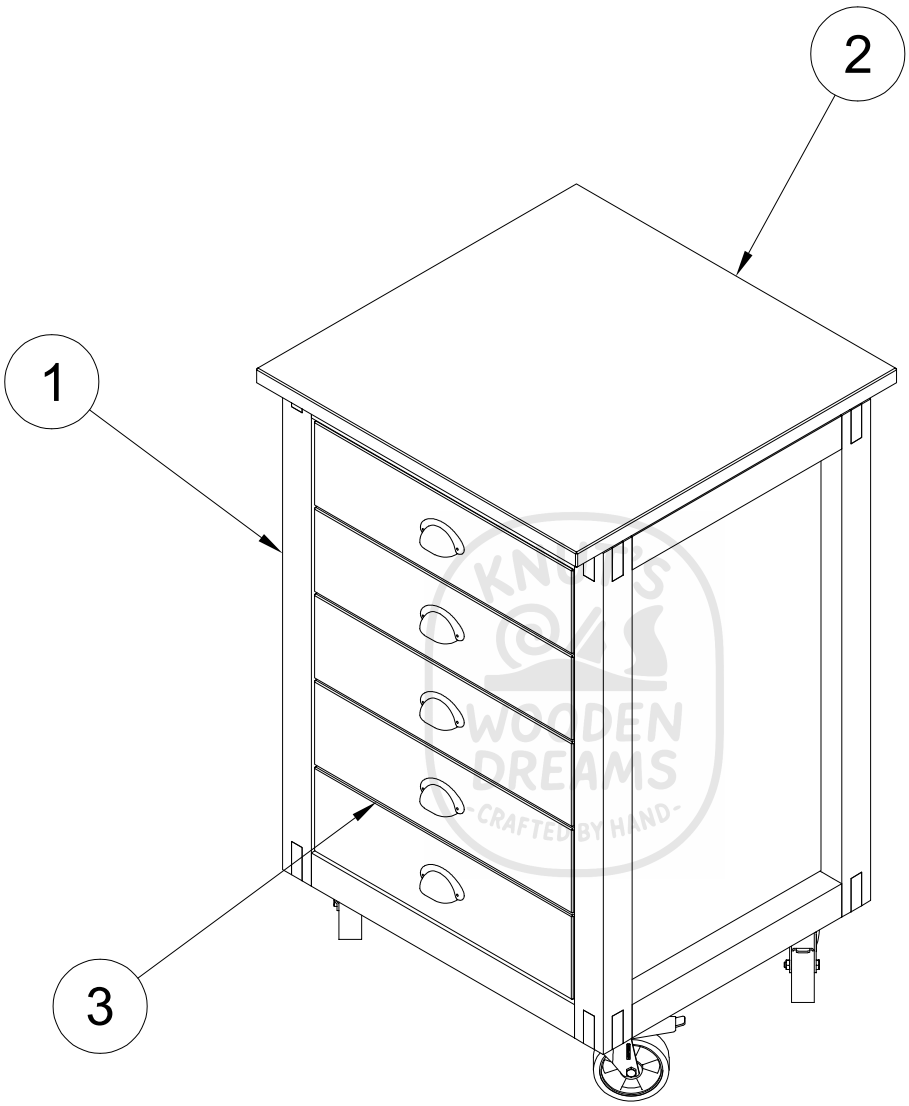

Dept.	Technical reference	Created by Knut Welzel 17.01.2024	Approved by		
		Document type	Document status		
		Title Standardtisch	DWG No.		
			Rev.	Date of issue	Sheet 1