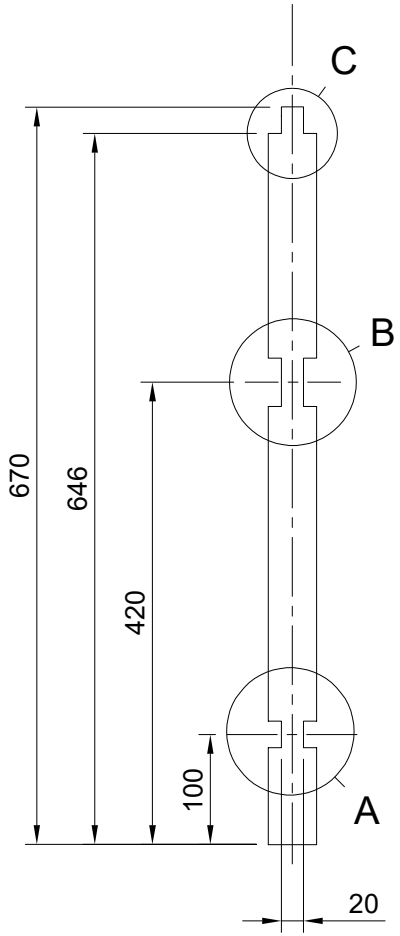

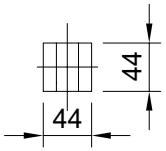

C (1:2)

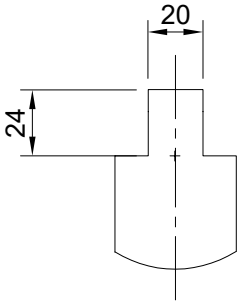

B (1:2)

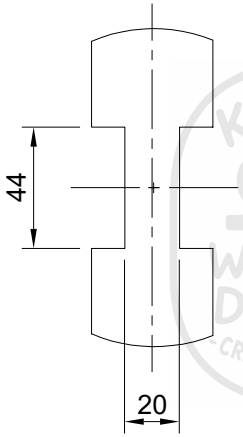

A (1:2)

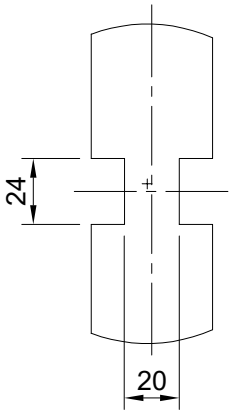

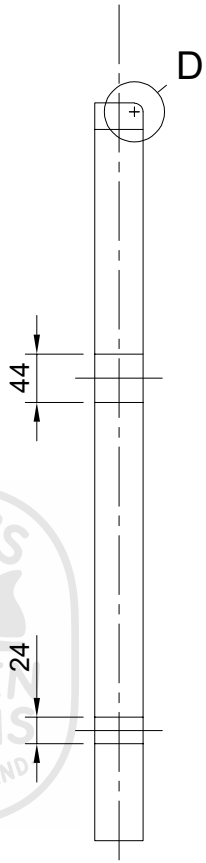

D (1:2)

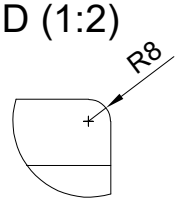

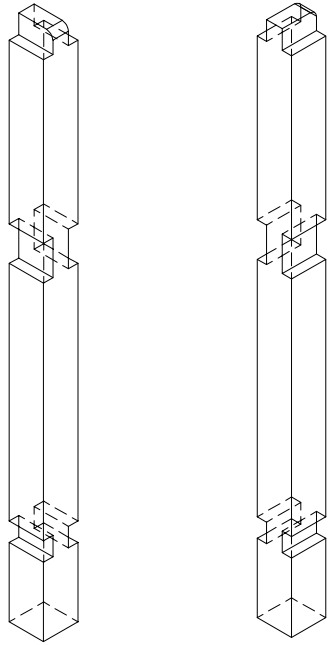

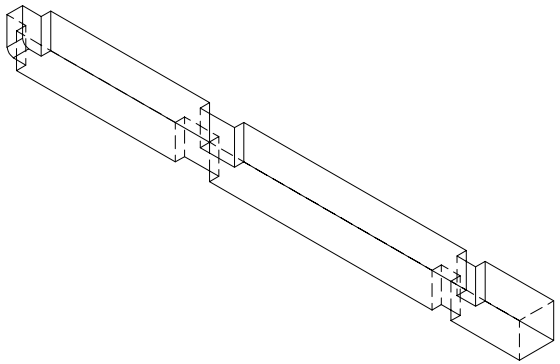

KNUT'S WOODEN DREAMS - CRAFTED BY HAND

Dept.	Technical reference	Created by: Knut Welzel 08.01.2025	Approved by
Kiefer: 670x44x44 Masse: 0.68 kg 2 Stück		Document type	Document status
		Title: Bein vorn lang	DWG No.
			Rev. / Date of issue / Sheet 7