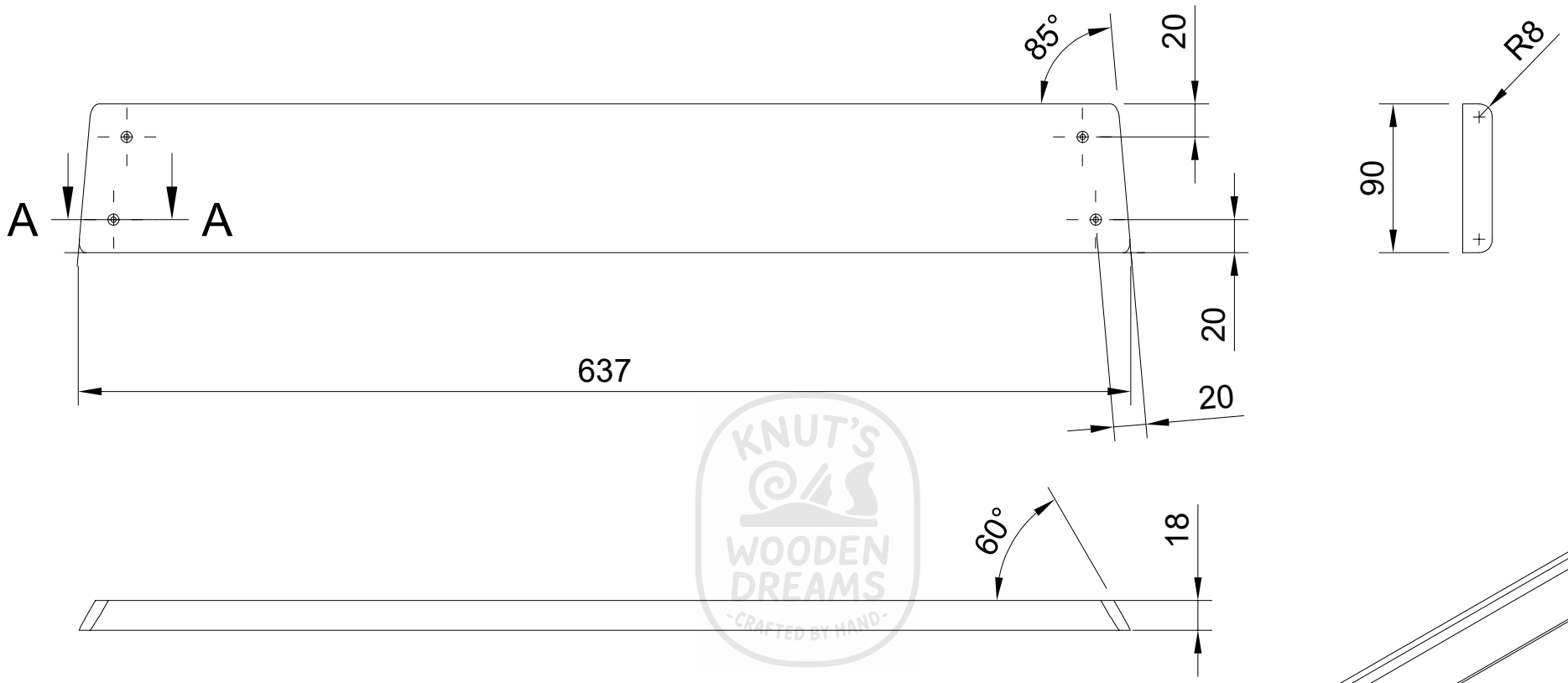

KNUT'S WOODEN DREAMS -CRAFTED BY HAND-

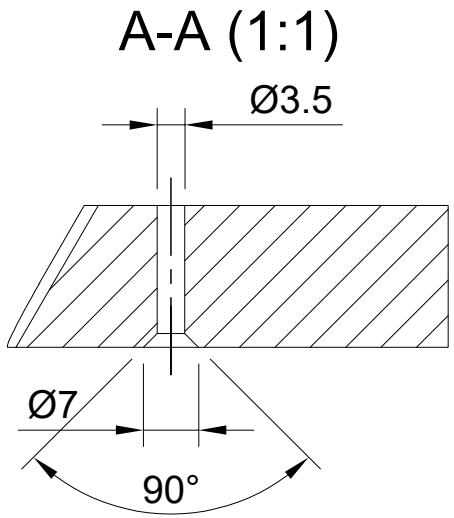

Dept.	Technical reference	Created by Knut Welzel 02.03.2025	Approved by
Kiefer: 637x90x18 Masse: 561.176 g 1 Stück		Document type	Document status
		Title Brett Lehne 4 links	DWG No.
			Rev. / Date of issue / Sheet 30