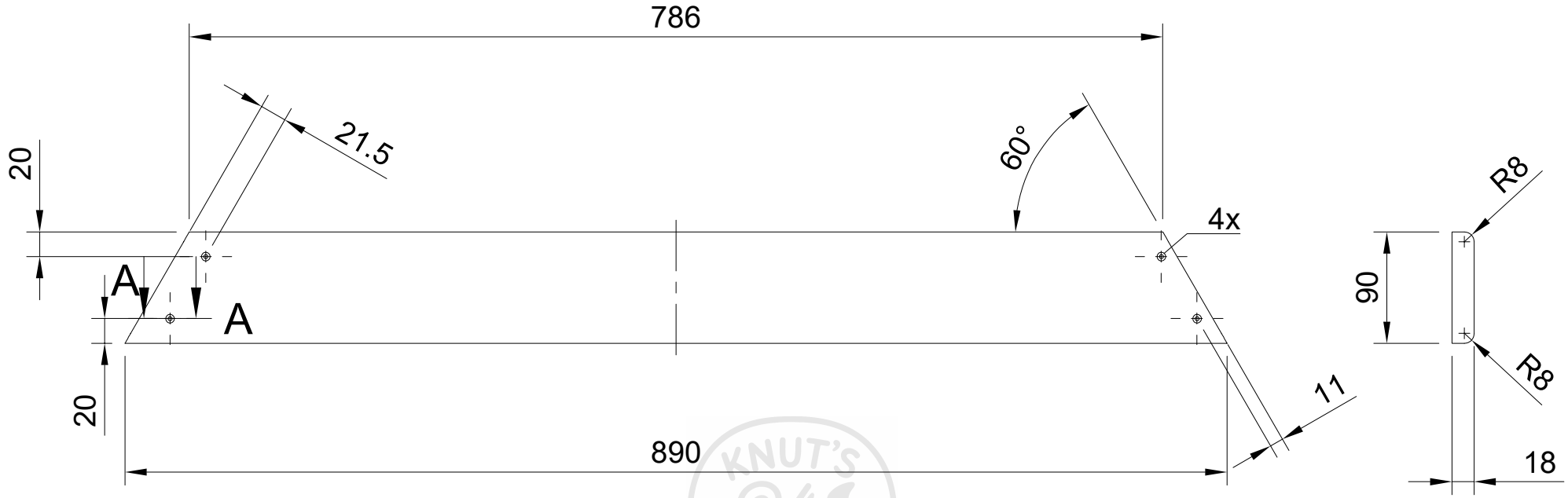

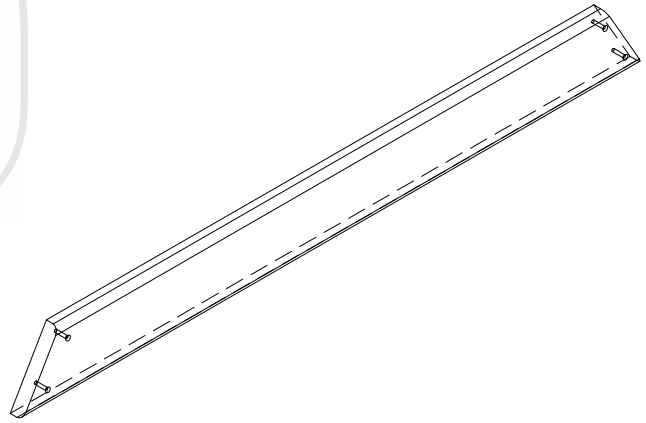

A-A (1:1)

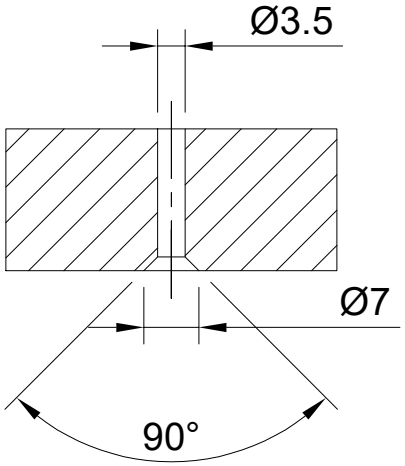

Dept.	Technical reference	Created by Knut Welzel 02.03.2025	Approved by
Kiefer: 890x90x18 Masse: 0.76 kg 1 Stück		Document type	Document status
		Title Brett Sitz 2 links	DWG No.
			Rev. / Date of issue / Sheet 36