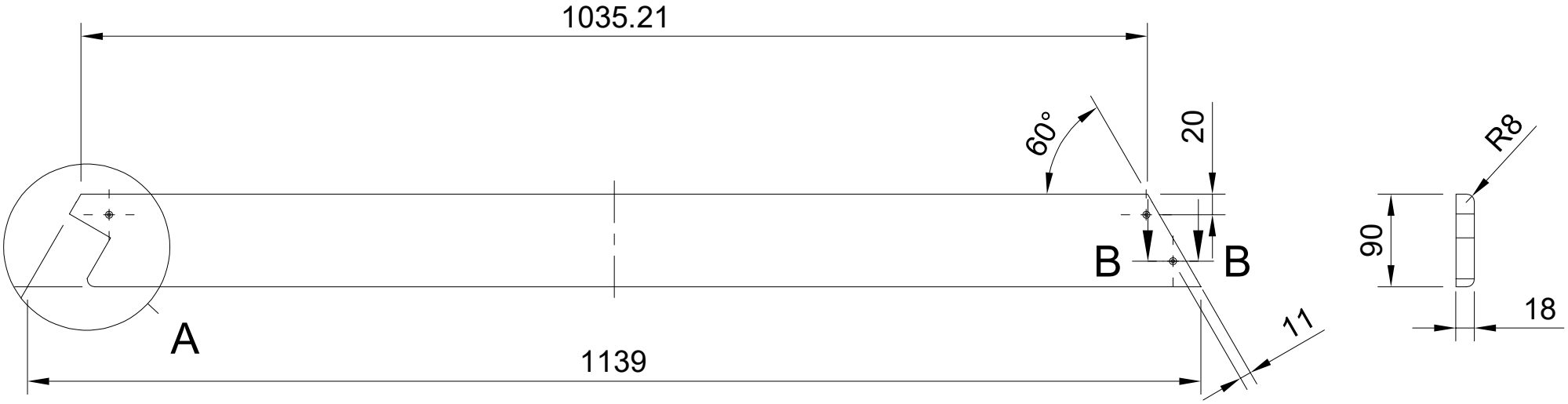

B-B (1:1)

A (1:2)

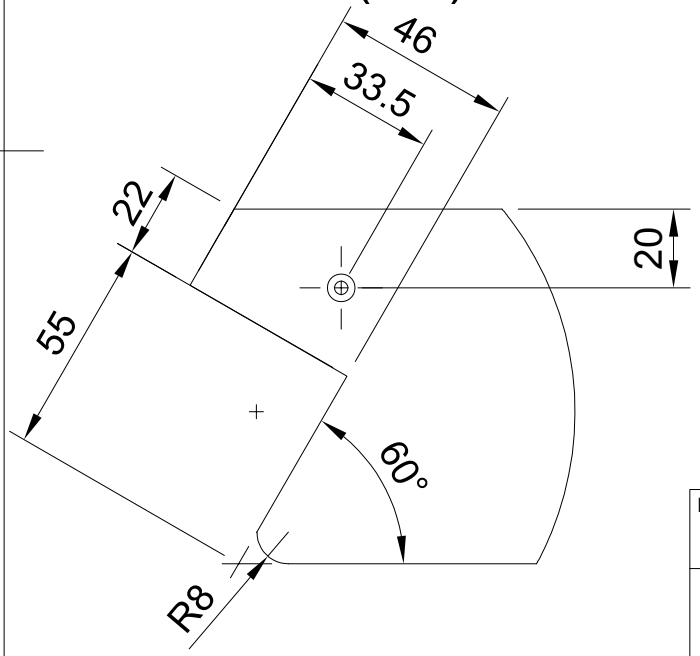

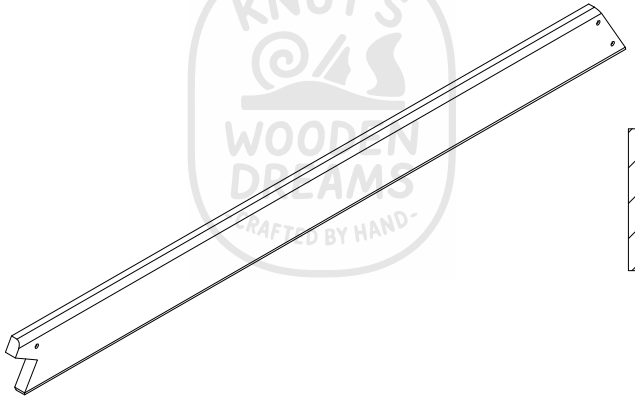

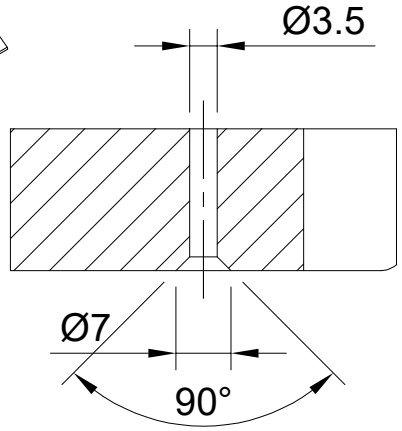

KNUT'S WOODEN DREAMS -CRAFTED BY HAND-

Dept.	Technical reference	Created by Knut Welzel 02.03.2025	Approved by	
Kiefer: 1139x100x18 Masse: 0.95 kg 1 Stück		Document type	Document status	
		Title Brett Sitz 4 links	DWG No.	
			Rev. / Date of issue	Sheet 38