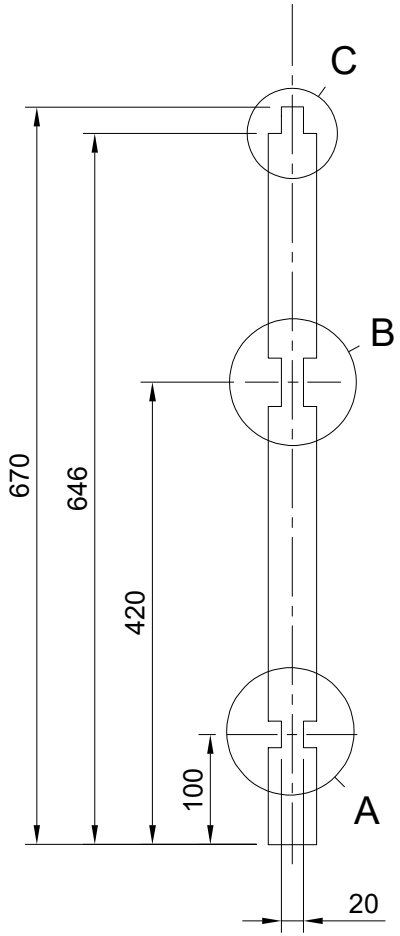


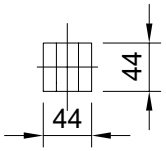


C (1:2)

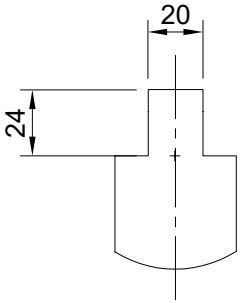


B (1:2)

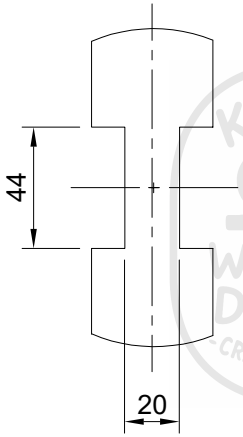


A (1:2)

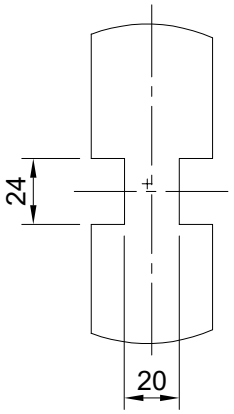


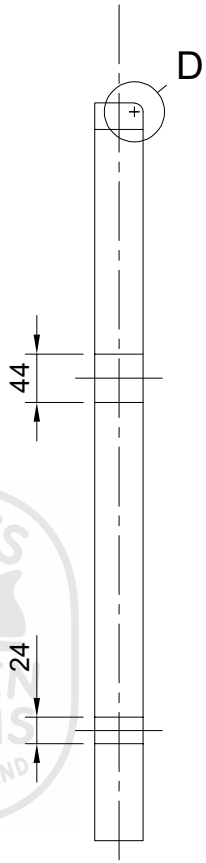


D (1:2)

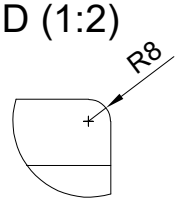


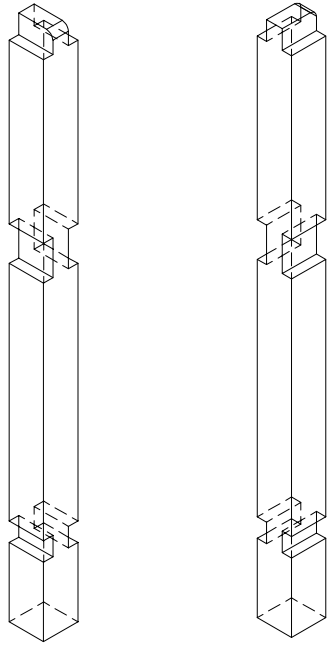

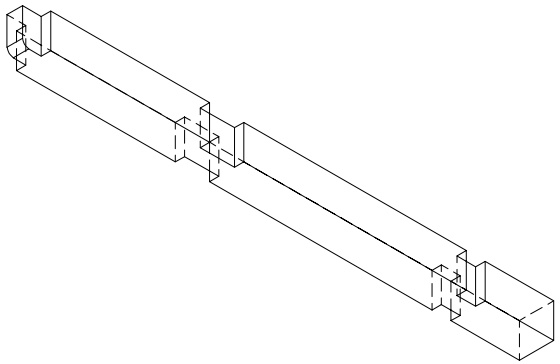

KNUT'S WOODEN DREAMS - CRAFTED BY HAND

| | | | |
|---|---|---|---|
| Dept. | Technical reference | Created by: Knut Welzel 08.01.2025 | Approved by |
| Kiefer: 670x44x44<br>Masse: 0.68 kg<br>2 Stück | | Document type | Document status |
| | | Title: Bein vorn lang | DWG No. |
| | | | Rev. / Date of issue / Sheet 7 |