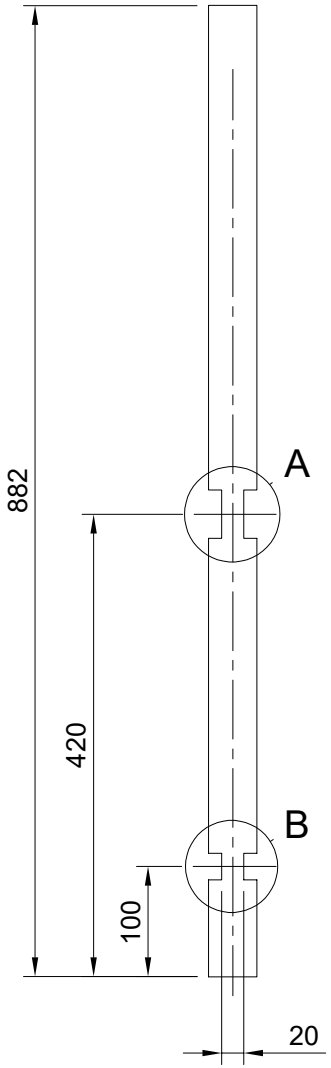

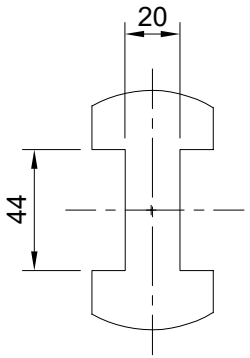

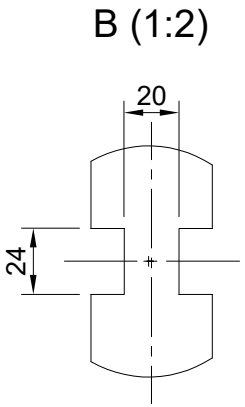

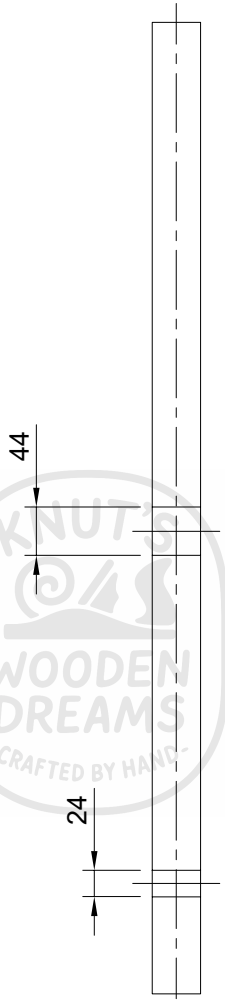

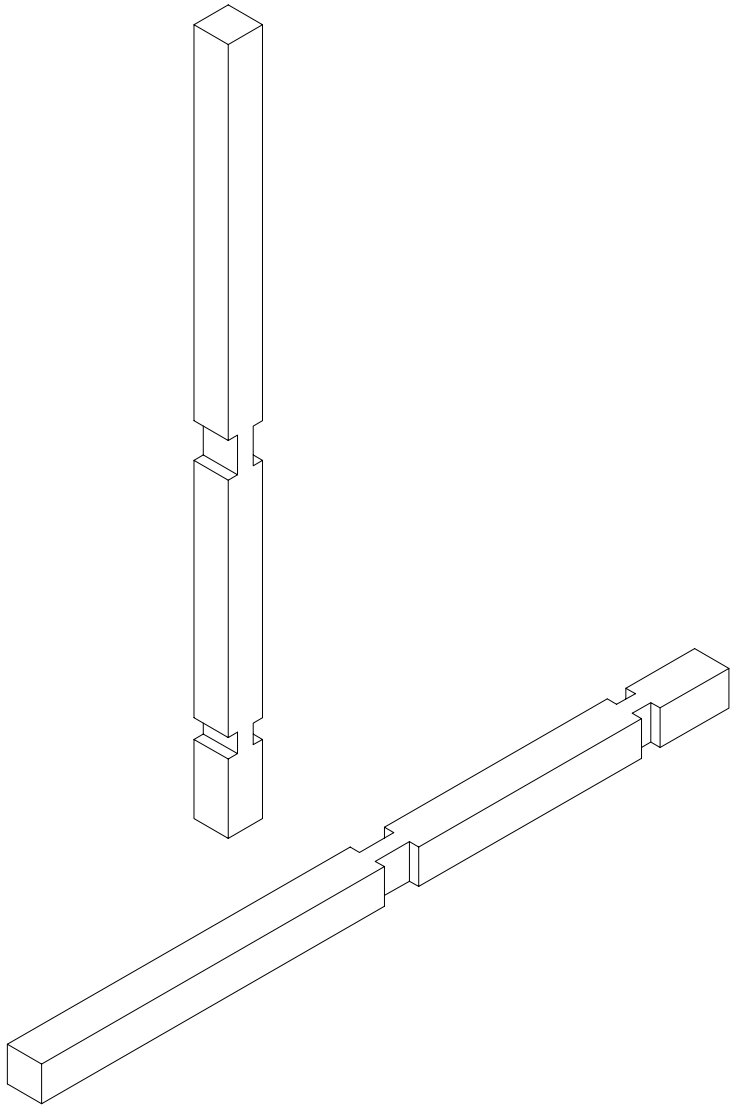

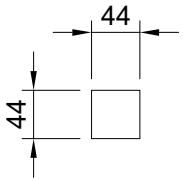

KNUT'S WOODEN DREAMS - CRAFTED BY HAND -

Dept.	Technical reference	Created by	Approved by
		Knut Welzel 08.01.2025	
Kiefer: 882x44x44 Masse: 0.93 kg 4 Stück		Document type	Document status
		Title Bein hinten	DWG No.
			Rev. / Date of issue / Sheet 8