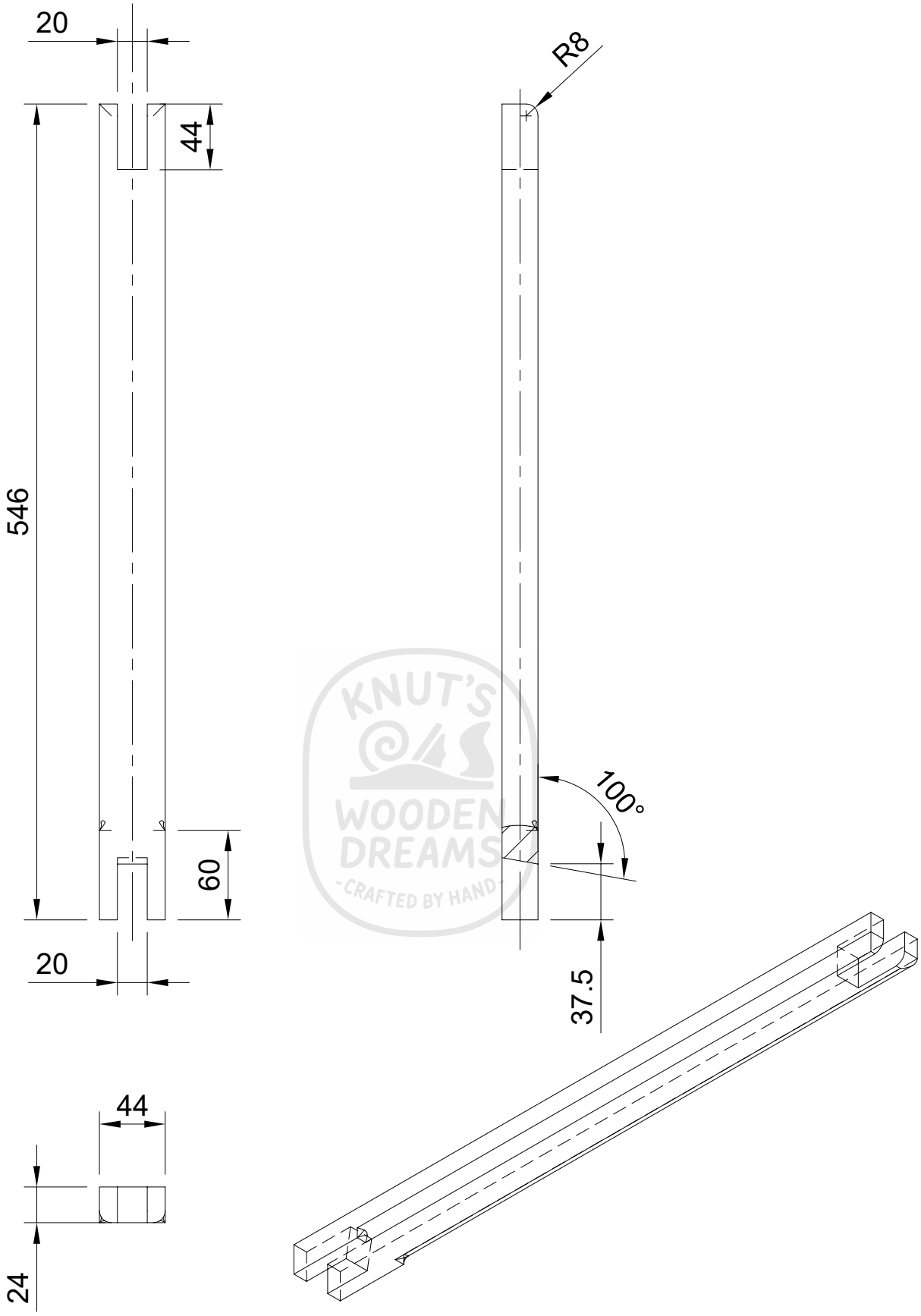

KNUT'S WOODEN DREAMS
CRAFTED BY HAND

Dept.	Technical reference	Created by Knut Welzel 19.01.2025	Approved by		
Kiefer: 546x44x24 Masse: 0.30 kg 2 Stück		Document type Title Armlehne	Document status DWG No.		
			Rev.	Date of issue	Sheet 12