| Teileliste | | | |
|---|---|---|---|
| Element | Anz. | Bauteilnummer | Beschreibung |
| 1 | 1 | Bein vorn | 442x44x44 |
| 2 | 1 | Bein hinten | 882x44x44 |
| 3 | 1 | Strebe oben | 590x44x44 |
| 4 | 1 | Strebe unten | 590x44x24 |
| 5 | 1 | Strebe Lehne | 492x44x44 |

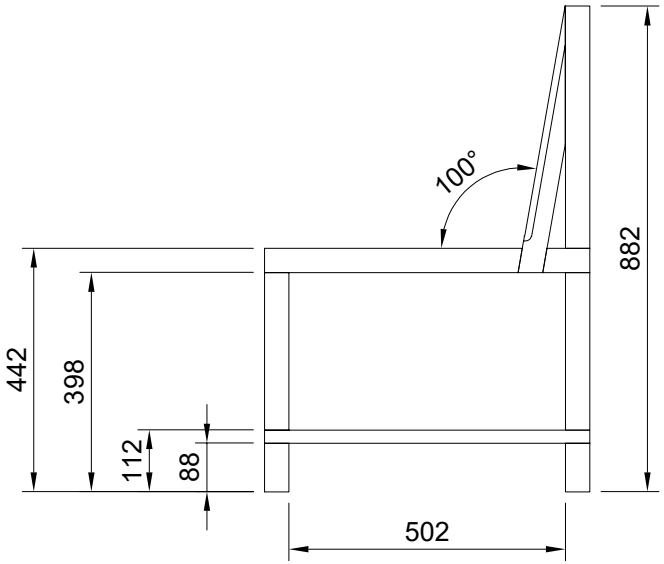


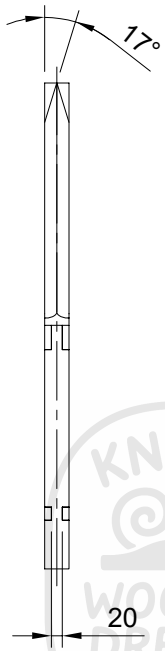


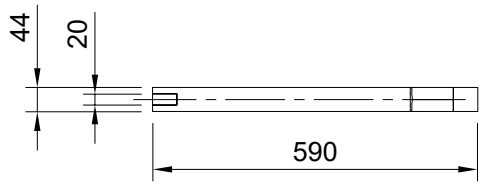


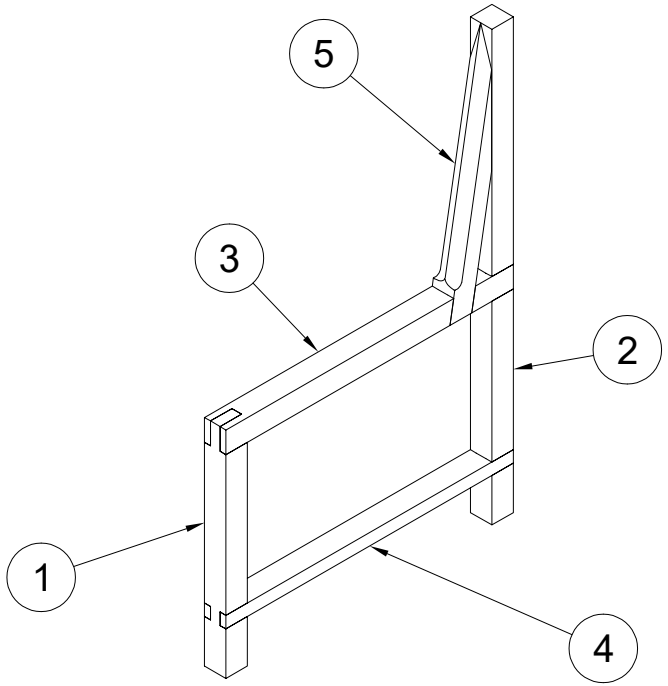


KNUT'S WOODEN DREAMS -CRAFTED BY HAND-

| | | | |
|---|---|---|---|
| Dept. | Technical reference | Created by: Knut Welzel 02.03.2025 | Approved by |
| Kiefer: ---- | | Document type | Document status |
| Masse: 2.61 kg | | Title: Seitenteil Mitte | DWG No. |
| 2 Stück | | | Rev. / Date of issue / Sheet 14 |