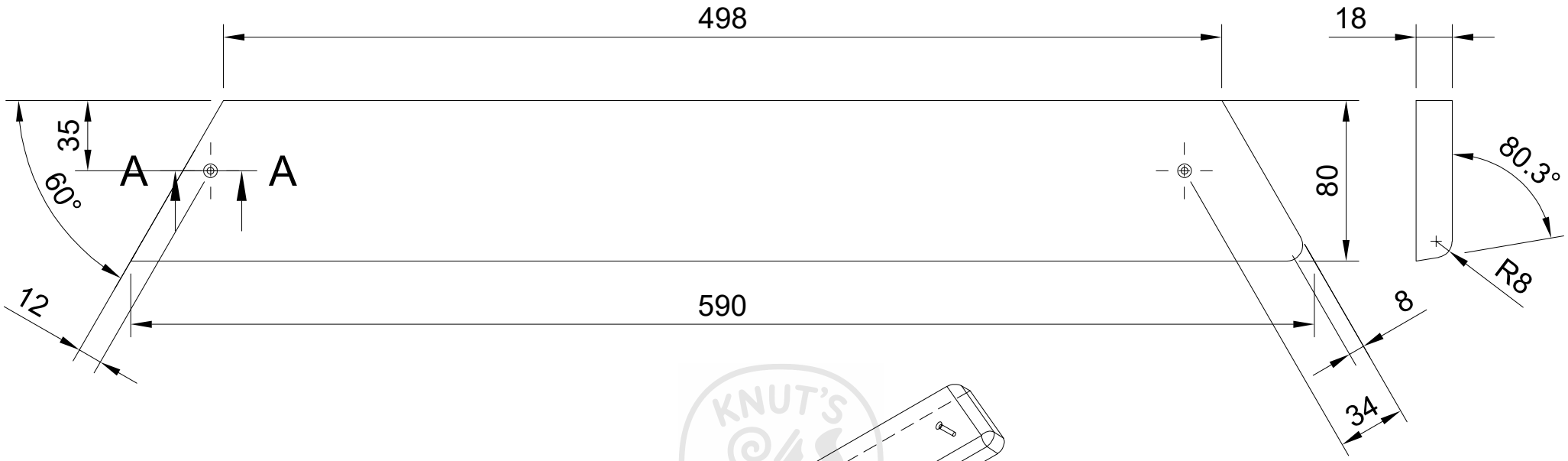

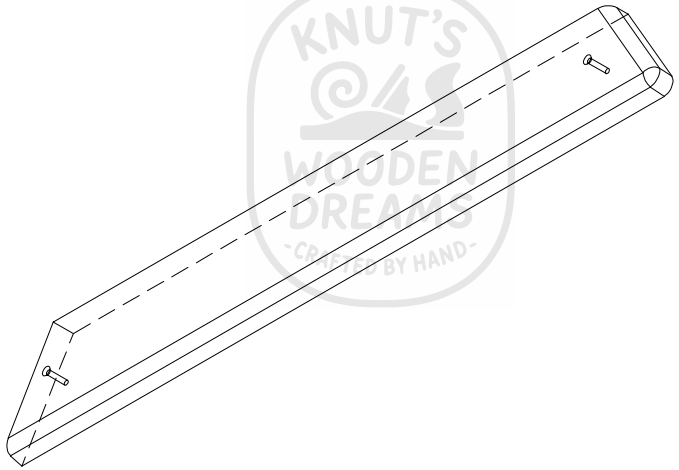

A-A (1:2)

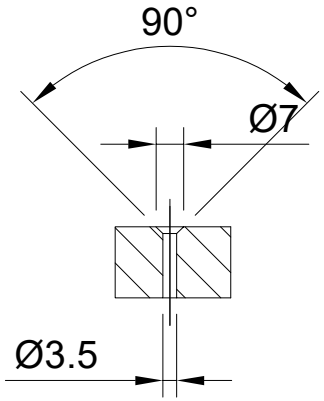

KNUT'S WOODEN DREAMS -CRAFTED BY HAND-

Dept.	Technical reference	Created by Knut Welzel 14.01.2025	Approved by
Kiefer: 592x80x18 Masse: 0.43 kg 1 Stück		Document type	Document status
		Title Deckleiste rechts	DWG No.
			Rev. / Date of issue / Sheet 49