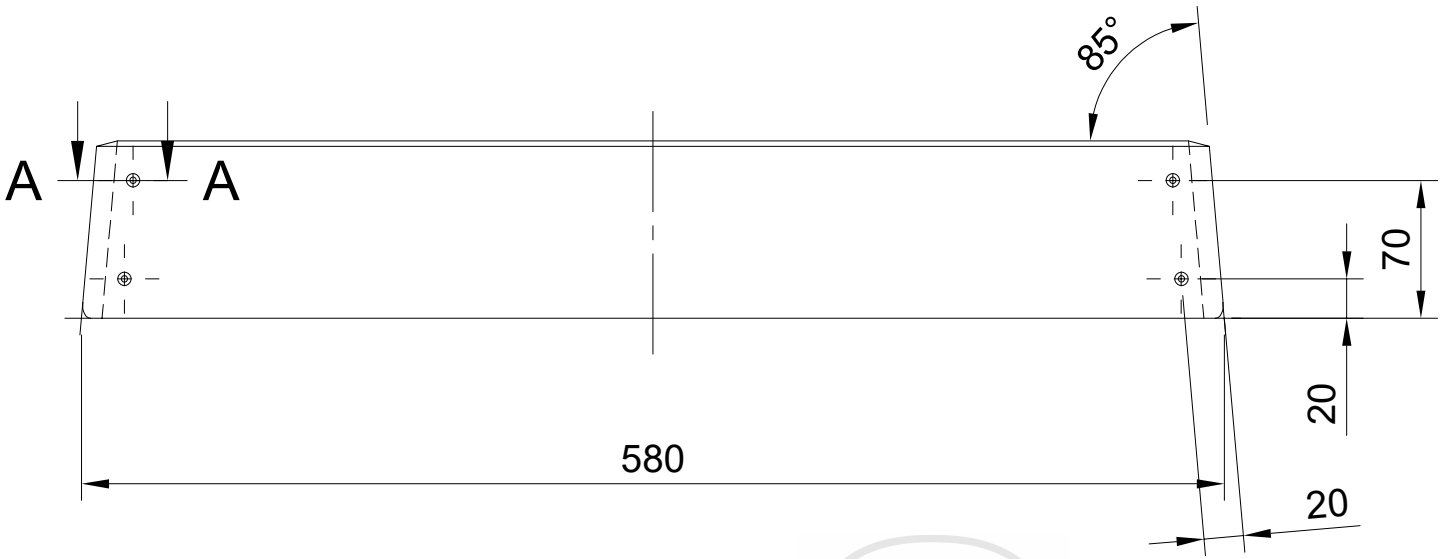

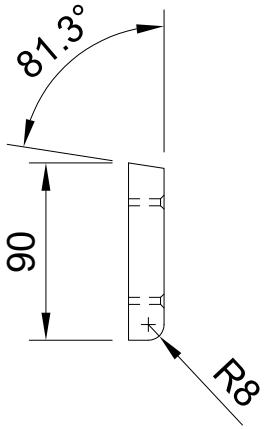

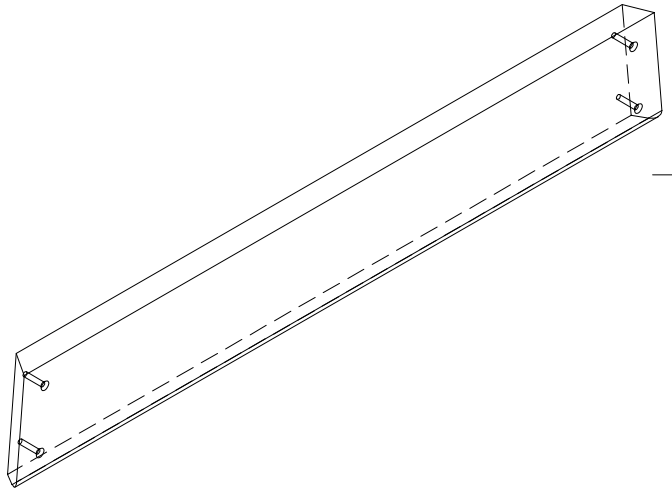

A-A (1:1)

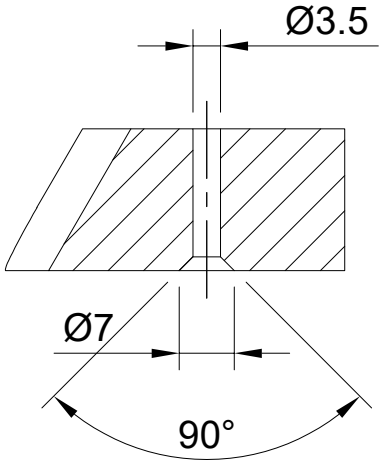

KNUT'S WOODEN DREAMS -CRAFTED BY HAND-

Dept.	Technical reference	Created by Knut Welzel 02.03.2025	Approved by
Kiefer: 581x90x18 Masse: 506.214 g 1 Stück		Document type	Document status
		Title **Brett Lehne 1 rechts**	DWG No.
			Rev. / Date of issue / Sheet 31