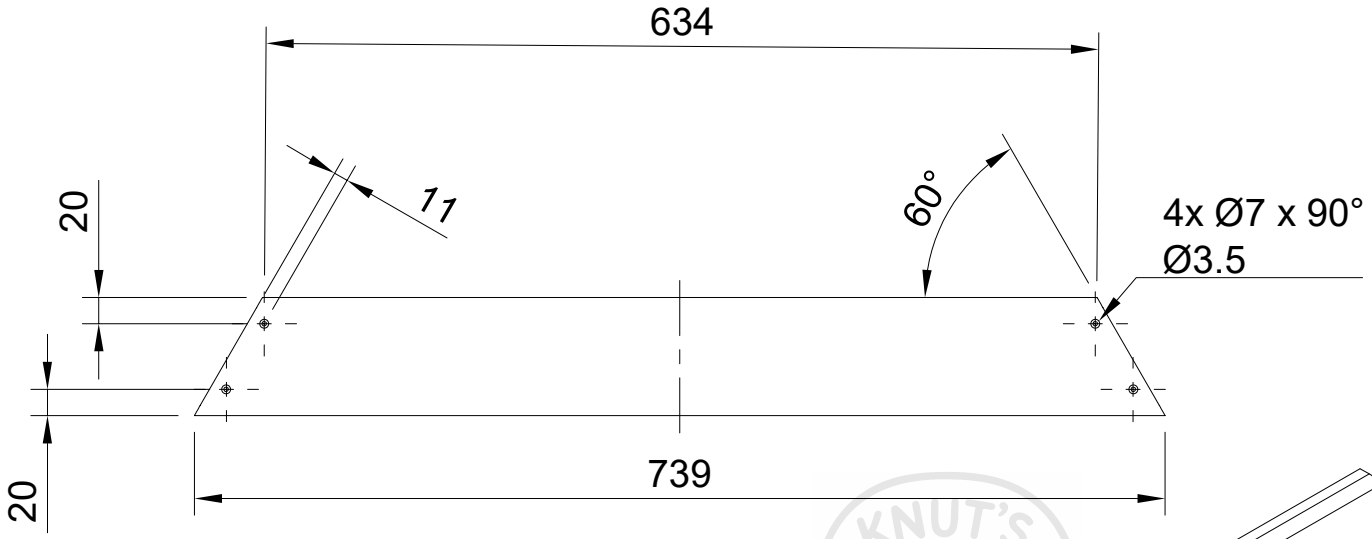

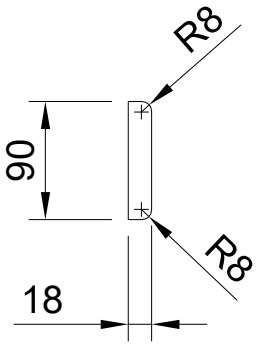

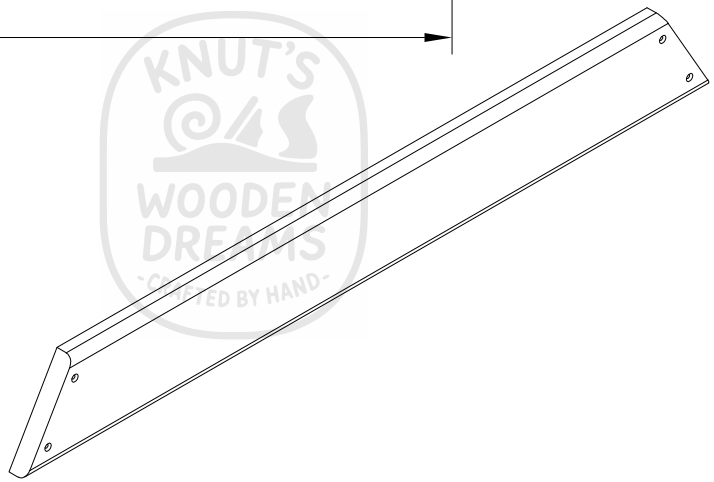

KNUT'S WOODEN DREAMS -CREATED BY HAND-

Dept.	Technical reference	Created by Knut Welzel 02.03.2025	Approved by	
Kiefer: 739x90x18 Masse: 0.62 kg 1 Stück		Document type	Document status	
		Title Brett Sitz 1	DWG No.	
			Rev. / Date of issue	Sheet 39