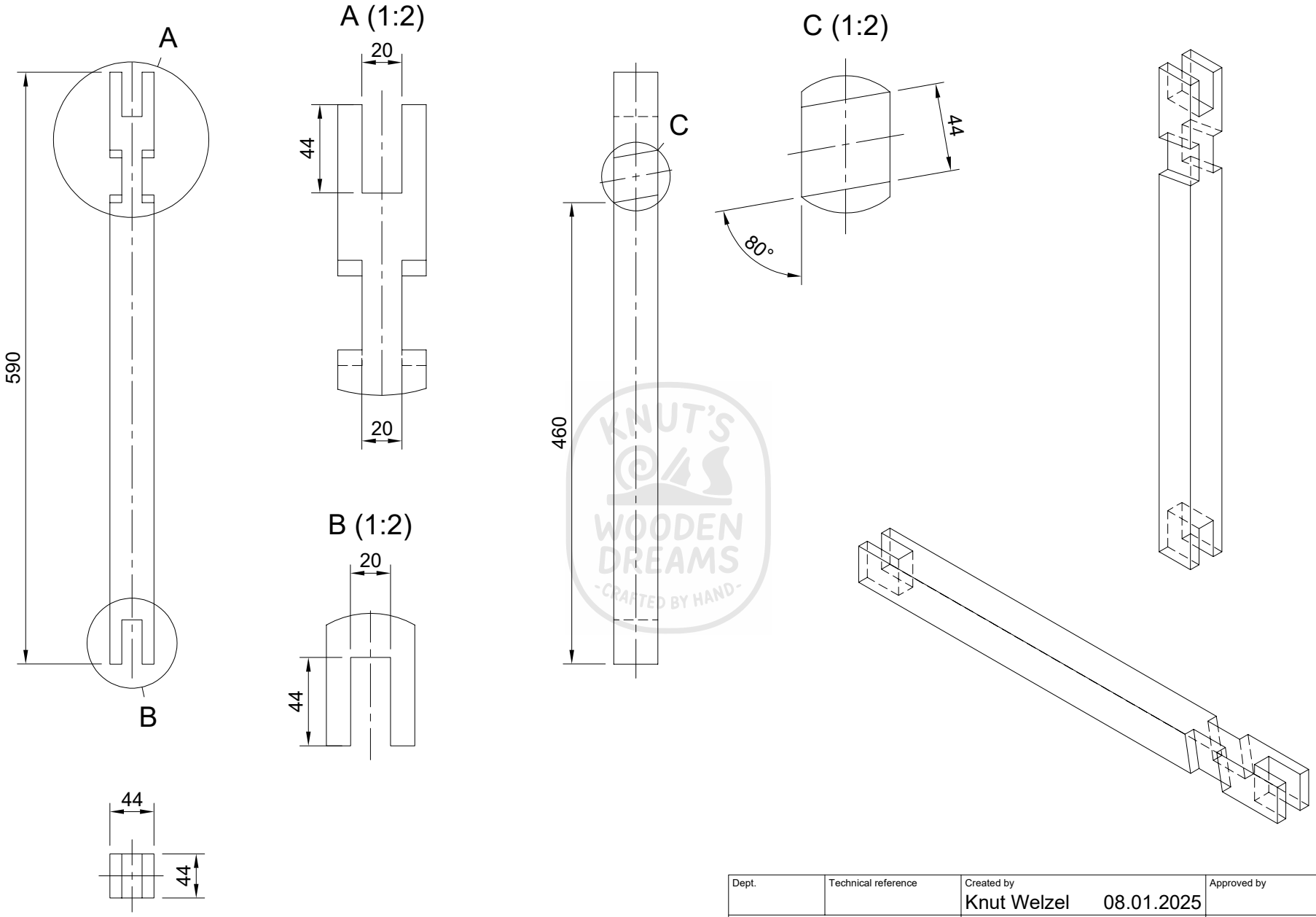

KNUT'S WOODEN DREAMS -CRAFTED BY HAND-

Dept.	Technical reference	Created by	Approved by
		Knut Welzel 08.01.2025	
Kiefer: 590x44x44		Document type	Document status
Masse: 0.58 kg		Title: Strebe oben	DWG No.
4 Stück			Rev. / Date of issue / Sheet 10