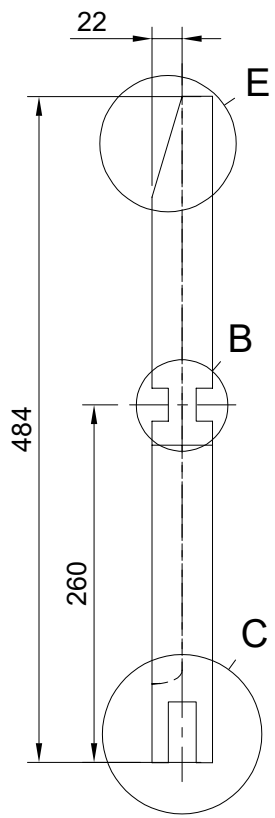

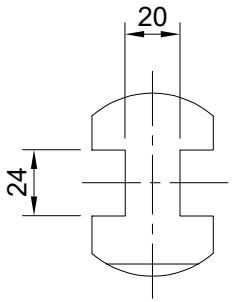

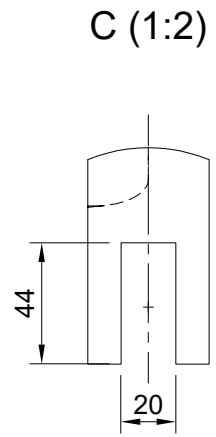

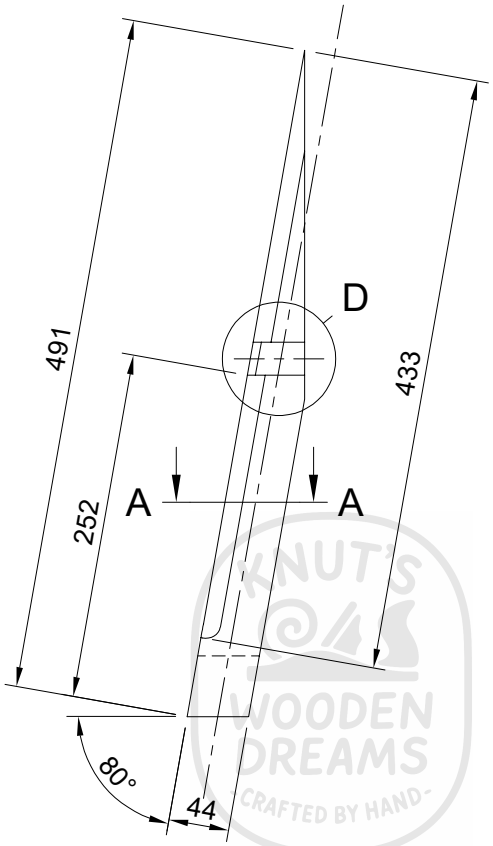

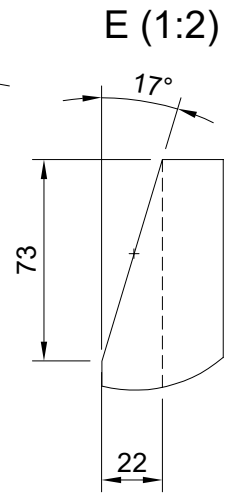

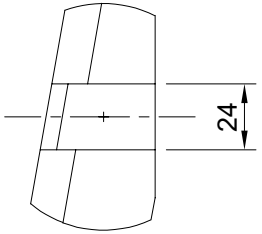

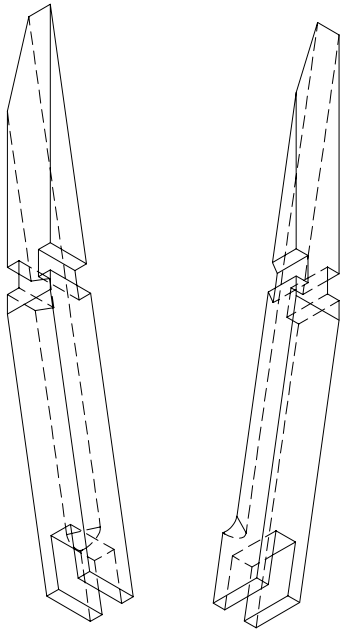

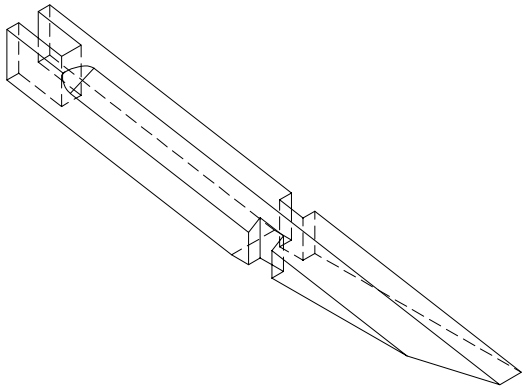

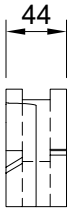

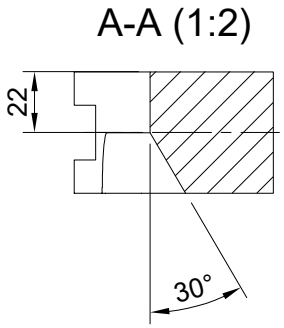

KNUTS WOODEN DREAMS
CRAFTED BY HAND

Dept.	Technical reference	Created by: Knut Welzel 02.03.2025	Approved by
Kiefer: 492x44x44 Masse: 0.33 kg 1 Stück		Document type	Document status
		Title: Strebe hinten links	DWG No.
			Rev. / Date of issue / Sheet 11